STRUCTURE TYPE STUDY

FOR THE

REPLACEMENT OF THE MERRYALL ROAD BRIDGE BRIDGE NO. 05118 OVER THE WEST ASPETUCK RIVER

NEW MILFORD, CONNECTICUT

FEBRUARY 2015

Prepared for:
Town of New Milford
P.O. Box 360
New Milford, CT 06776

Prepared by:
Wengell, McDonnell & Costello, Inc.
~ Consulting Engineers ~
87 Holmes Road
Newington, CT 06111
Tel. (860) 667-9624
Fax (860) 665-1551

TABLE OF CONTENTS

PROJECT LOCATION MAP ii

I. EXECUTIVE SUMMARY 1

II. EXISTING STRUCTURE CONDITION 1

III. SUBSURFACE CONDITIONS 2

IV. HYDROLOGY & HYDRAULICS 2
Hydrology 2
Existing Conditions 4
Model Development 4
Preliminary Proposed Hydraulics 6

V. MAINTENANCE AND PROTECTION OF TRAFFIC: 9

VI. PROPOSED ALTERNATIVES 9

VII. COST SUMMARY & RECOMMENDATION 11

APPENDIX A– PHOTOGRAPHS A1 – A3

APPENDIX B – ConnDOT BRIDGE INSPECTION REPORT B1 – B34

APPENDIX C – FIGURES C1 – C3

APPENDIX D – COST OPINIONS D1 – D3

APPENDIX E – PRELIMINARY BORING LOGS E1 – E4

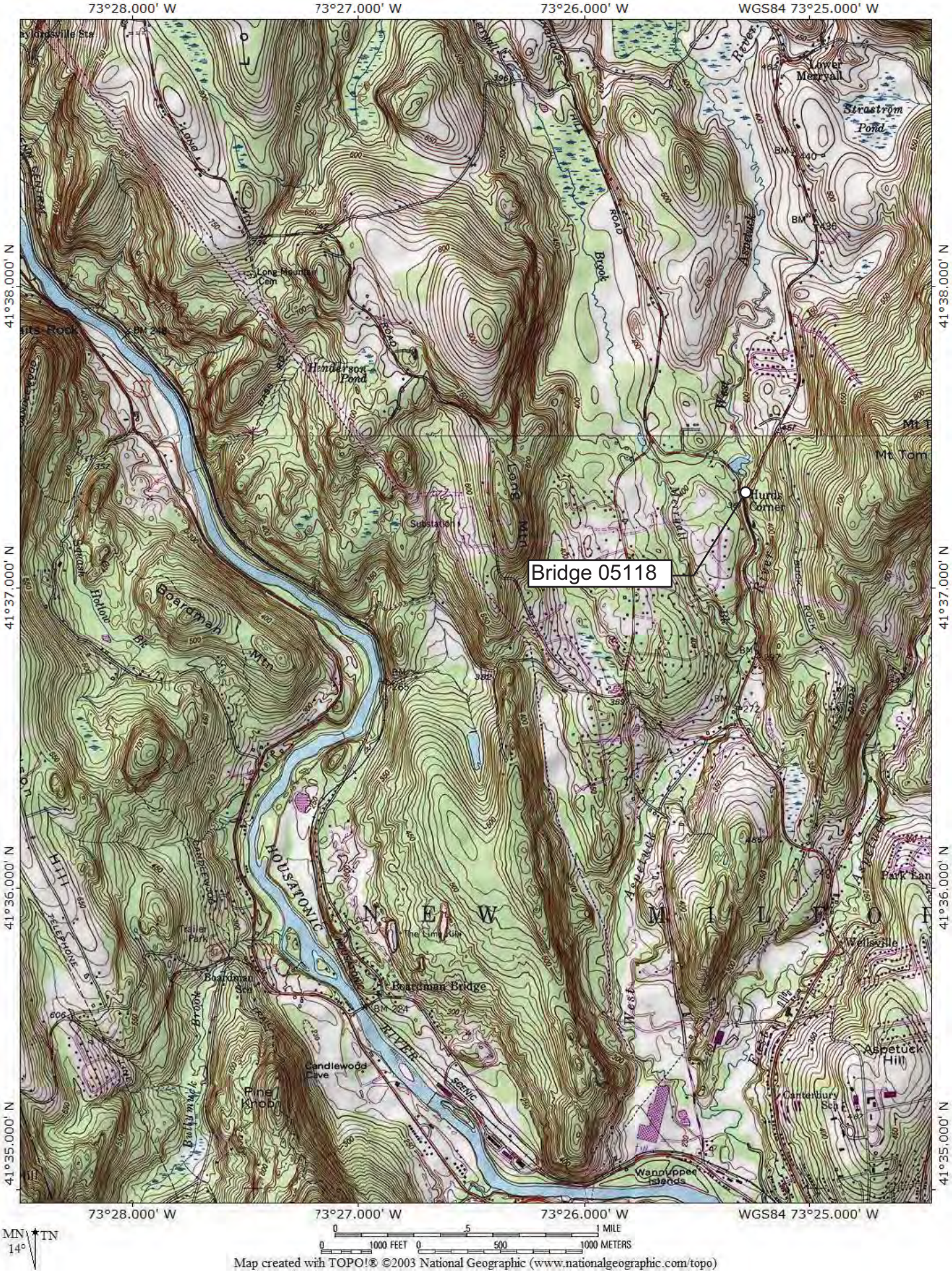

Map created with TOPO!® ©2003 National Geographic (www.nationalgeographic.com/topo)

I. EXECUTIVE SUMMARY

This report summarizes our evaluation of the structure type study prepared for Bridge No. 05118, which carries Merryall Road over the West Aspetuck River in the Town of New Milford, Connecticut.

Based upon the existing condition information available on the bridge, our visual observations in the field, hydrology and hydraulic analysis and the costs developed in this report for various superstructure replacement options, we recommend the complete replacement of the existing bridge superstructure utilizing Alternative III – Precast Deck Unit Bridge. This superstructure replacement should generally consist of the following:

- Close the bridge and detour traffic via local roads for an estimated duration of 8 to 10 months (or longer dependent on the time of year construction begins).
- Generally maintain the existing horizontal and vertical geometry of the roadway
- Removal of the entire existing bridge superstructure and existing substructure.
- Removal of the existing guide posts and guide rail within the project limits.
- Install a new superstructure supported by new concrete abutments and reinforced concrete wingwalls on a deep foundation system.
- Install membrane waterproofing and new hot mix asphalt overlay on top of the precast concrete deck units.
- Install new end anchorages and replace guide rail within the project limits.
- Install new approach walls at all four corners.
- Install new bridge rail.
- Full depth reconstruction of approximately 225 linear feet of roadway; including the bridge.

The proposed work for Alternative III, only including superstructure replacement work, is estimated to have a year 2016 construction cost of $370,000, assuming 4% annual inflation from 2015 costs with 25% for contingencies. This option is selected over Alternatives I & II because in our opinion it is cost effective, easy and quick to install, easy to maintain once the project is completed, has a long projected life-span, and provides the largest hydraulic opening (highest low chord and smallest structural depth).

II. EXISTING STRUCTURE CONDITION

Existing Bridge No. 05118 is a single span structure, which carries Merryall Road over the West Aspetuck River in the Town of New Milford. The bridge is located on Merryall Road at the intersection of Merryall Road and West Meetinghouse Road. The existing structure was constructed circa 1937. The structure measures 35 feet in total length with a clear span of 31 feet. The bridge carries two lanes of bi-directional traffic. The bridge deck measures 30.0' curb-to-curb and 35.0' out-to-out. The bridge consists of a superstructure constructed of concrete tee beams set on a substructure of reinforced concrete abutments and wingwalls. The bridge railings are open reinforced concrete parapets consisting of two end pilasters and three (3) intermediate pilasters with seven (7) concrete spindles in between each intermediate pilaster. The following table

summarizes the recent October 25, 2012 ConnDOT Bridge Inspection Report. Please refer to the attached Inspection Report in Appendix B. The rating and condition for the major bridge components are as follows:

I.R. Summary Table

Item No.	Item	Rating	
58	Deck	6	Satisfactory
59	Superstructure	4	Poor
60	Substructure	4	Poor
61	Channel & Ch. Protection	6	Bank is beginning to slump. River control devices and embankment protection have widespread minor damage. There is minor stream bed movement evident. Debris is restricting the channel slightly.
62	Culverts	N	
67	Structure Evaluation	4	Meets minimum tolerable limits to be left in place as is
68	Deck Geometry	5	Somewhat better than minimum adequacy to tolerate being left in place as is
113	Scour Critical	8	Bridge foundations determined to be stable for assessed or calculated scour conditions; calculated scour is above top of footing.

*See attached I.R. for reference.

III. SUBSURFACE CONDITIONS

Borings for this investigation were performed by Associated Boring Company Inc. on November 20th & 21st, 2014. A geotechnical evaluation was not included in this phase of design. However, a geotechnical evaluation will be performed and the geotechnical parameters and recommendations will be incorporated into the foundation design.

The geotechnical subsurface investigation consisted of two (2) soil borings (See Appendix E for the preliminary "Boring Logs"). Both borings were taken directly adjacent to the existing bridge structure and were taken to bedrock. Bedrock was encountered on both sides of the bridge at depths between 35 and 45 feet from the roadway surface. At each boring the bedrock was cored and the information provided will be used in the geotechnical evaluation. Soils in the area are typically medium to fine sands with a trace of silt, along with some gravel and weathered bedrock.

IV. HYDROLOGY & HYDRAULICS

Hydrology

The drainage area at the bridge was computed by StreamStats to be 17.3 mi^2 which is consistent with the *Gazetteer of Drainage Areas of Connecticut*. According to Section 9.3.5 of the

ConnDOT *Drainage Manual*, the size of the drainage area places the bridge in the Large Structure category (between 10- 100 mi^2 drainage area). Bridge No. 05118 is located within FEMA Zone AE with a regulatory Floodway.

The June 4, 1987 Town of New Milford Flood Insurance Study (FIS) studied West Aspetuck River in detail in the vicinity of the project area. The FIS flows were estimated using USGS regional regression equations developed by Weiss. The following are the adopted FIS discharges at Merryall Avenue Bridge:

Table 1- FIS Flows

Return Frequency (Year)	Discharge (cfs)
10	875
50	1,880
100	2,570
500	4,770

As a check of the FIS results, StreamStats was used to estimate peak flows. StreamStats utilizes multi-variable regression equations (developed by the USGS) based on drainage area, 24-hour rainfall and mean basin elevation. This web-based application readily computes peak discharges using an interactive map. **Error! Reference source not found.** shows a summary of the StreamStats discharges at Wellsville Avenue and a comparison to the FIS flows.

Table 2- FIS -StreamStats Comparison

Return Frequency (Years)	FIS Discharge (cfs)	StreamStats	
		Discharge (cfs)	Δ FIS
2	-	529	-
10	875	1,130	-29%
25	-	1,530	-
50	1,880	1,880	0 %
100	2,570	2,280	+11%
500	4,770	4,010	+16%

The FIS flows are higher than the STREAMSTATS flows for the larger storm events. Based on a conservative approach, WMC recommends the project design discharges be based on the FIS flows. The following table summarizes the project design discharges based on the FIS regulatory discharges:

Table 3- Design Discharges

Return Frequency (Year)	Discharge (cfs)
Average Daily	31
Average Spring	61
2	215
3	335
5	520
10	875
25	1,400
50	1,880
100	2,570
200	3,400
500	4,770

Note that the average daily and average spring flows were estimated using the equations recommended in Section 6.16 of the ConnDOT *Drainage Manual*. The 2, 3, 5, 25 and 200 year discharges were approximated from a log-probability plot of the recommended design discharges.

Existing Conditions

Wellsville Avenue is a paved, two lane road located in the central portion of New Milford. The bridge is located on Merryall Road at the intersection of Merryall Road and West Meetinghouse Road. The existing bridge is a single span structure with concrete tee beams supported on reinforced concrete abutments with wingwalls, all on spread footings. The bridge is skewed at an angle of approximately 49º with the river. The hydraulic clear span of the bridge along the face of the bridge is 32 feet with the span measured perpendicular to the abutments being 20.5 feet. The overall out-to-out bridge width is 35.0 feet perpendicular to the roadway which is 54.5 feet along the length of the abutments. Although the concrete parapets are not solid, they would be significant hydraulic obstructions for overtopping flood events.

In the immediate vicinity of Bridge No. 05118, the West Aspetuck River is a high gradient watercourse with a channel aligned parallel to the West Meetinghouse Road. The main channel is well-defined with steep banks. The main channel of the river resembles a typical mountainous stream with cobbles and large boulders; pools and riffles and some obstructions due to fallen trees.

Model Development

The hydraulic analyses prepared for this project are based on HEC-2 model output obtained from Federal Emergency Management Agency (FEMA) in combination with WMC survey sections. The HEC-2 model obtained from FEMA contained output only. The existing conditions model in HEC-RAS (version 4.1.0) was developed using WMC surveyed cross-sections which approximately match the FEMA cross-section locations and also few other additional sections.

It should be noted that the hydraulic analysis for this project is based on a vertical datum of NGVD29 to be consistent with the FEMA FIS. FEMA HEC-2 output as well as WMC survey is based on a vertical datum of NGVD29. The FEMA model consists of 8 cross-sections within the study reach between FEMA sections “AA” and “AE”. The existing conditions model consists of a total of 12 cross-sections with the location of downstream end section matching FEMA section “AA” and the upstream end section matching FEMA section “AE”. Cross-sections numbered 1076.1 (FEMA “AD”) through 1076.3 (FEMA “AE”) were included using LIDAR data. These sections were included to achieve convergence of the 100-year flood profile to FEMA data within 0.5 feet. It should be noted that the cross-sections in the existing conditions model are oriented looking downstream.

Manning's roughness coefficients were defined based on aerial photography and field observation. Contraction and expansion coefficients were estimated based on observed field conditions. Ineffective flow limits due to the roadway embankments were established based on assuming an area of non conveyance. In the design model, the boundary conditions were set to a known slope for both the upstream and downstream ends. In accordance with typical modeling guidelines, the design models were run assuming mixed flow conditions.

A Natural Conditions Model was developed by removing the bridge and associated ineffective flow areas from the Existing Conditions, Design Model. In addition, all contraction and expansion coefficients were changed to, respectively, 0.1 and 0.3 to be consistent with HEC-RAS modeling guidelines for “natural” cross sections. It should be noted that the existing bridge with a hydraulic span of 20.5 feet encroaches significantly into the natural channel which has a width of 32 feet. Therefore, just upstream of the bridge the 100-year existing water surface elevation is approximately 3.0 feet over the 100-year natural conditions water surface elevation.

A Floodway analysis was conducted to evaluate the effect of the proposed changes within the floodway. A FEMA floodway model was developed in HEC-RAS based on the encroachment stations in the FEMA provided HEC-2 model output. The existing and proposed floodway models were developed by setting up encroachment stations in the existing and proposed conditions models respectively. Encroachment stations at the FEMA cross-sections were retained from the FEMA floodway model output. Encroachment stations at the additional cross-sections were estimated by scaling from FEMA map. In the FEMA floodway model, the boundary conditions were set to critical depth on the upstream end and a known water surface elevation from FIS at the downstream end. In accordance with CTDEEP modeling guidelines and FEMA regulations, the floodway models were run using sub-critical flow conditions.

The flood profiles for the existing bridge shows that the structure does not overtop during a 100-year storm event and has an under-clearance of approximately 3.3 feet at the upstream face. Roadway overtopping occurs at the western edge of the Meetinghouse Road and is approximately a 155 year storm event. The existing bridge experiences significant pressure flow through the bridge during the 200- and 500-year design storms. It should be noted that a hydraulic jump occurs at section 1076.1 estimating significantly high velocities due to mixed flow analysis.

Preliminary Proposed Hydraulics

Design models were prepared for each project alternative to evaluate proposed hydraulic conditions. The hydraulic clear span of the proposed bridge will be maintained at 20.5 feet measured perpendicular to the abutment faces with the abutments being skewed approximately 50º to the proposed roadway. Efforts to increase the hydraulic clear span of the proposed bridge to maintain conditions closer to natural conditions resulted in 100-year floodway increases. Therefore, the existing hydraulic span is retained. Also, the proposed 100-year flood elevation meets the minimum required underclearance of 2.0 feet. The three proposed alternatives involved replacement of the existing superstructure and abutments while maintaining the hydraulic clear span. The proposed roadway profile, bridge parapets and proposed guide rail will be different from the existing conditions. Scour conditions will be evaluated during the final design phase and the bridge will be designed to be scour resistant. The storm drainage patterns will closely match the existing condition.

The primary difference between the three alternatives involved different low chord elevations based on the type of beams used. Refer to the table on the following page for a hydraulic summary of Alternatives I-III. The 100-year design water surface elevation for all the three alternatives matches the existing water surface elevation, however the Deck Units bridge alternative has the most underclearance based on a shallow deck compared to the other alternatives. Based on the hydraulic results, the three alternatives have somewhat comparable hydraulic advantages when compared to the existing conditions. The three alternatives meet the regulatory and floodway criteria and do not adversely impact any properties or structures. Therefore, the choice of the recommended alternative is based on non-hydraulic factors and project costs.

Table 4 - Hydraulic Comparison Table

	Existing Condition	Natural Condition	Proposed Project Alternatives		
			Alternative I - Steel Beams Bridge	**Alternative II - Precast NEXT Beams Bridge**	**Alternative III - Precast Deck Unit Bridge**
	Flood Elevations at Upstream face of Crossing, Section 1075.6 (Feet)				
Design: 100-Year Event	355.05	356.0	355.05	355.05	355.05
500-Year Event (Check Frequency)	360.63	-	360.77	362.90	362.98
Regulatory- 100 Year Floodway	360.81	-	355.88	355.88	355.88
	Depth of Overtopping (Feet)				
Min. Overtopping Elevation	359.7	-	359.7	359.7	359.7
Freeboard (100-Year Design)	4.65	-	4.65	4.65	4.65
	Superstructure Underclearance (Feet)				
Design: 100-Year Event	3.3	-	2.9	3.32	4.15
Min. Low Chord Elevation (feet)	358.35	-	357.95	358.37	359.2

Notes:
1. All water surface elevations in NGVD29 vertical datum

V. MAINTENANCE AND PROTECTION OF TRAFFIC:

It is proposed that Merryall Road within the limits of the project be closed for the duration of construction. Traffic will be detoured along state and local roads.

Utility relocation will be scheduled and coordinated throughout the project to facilitate construction. The Contract Documents should require that the Contractor maintain access to all driveways during all phases of construction. It is anticipated that the proposed reconstruction of Merryall Road will be completed in approximately eight (8) to ten (10) months.

VI. PROPOSED ALTERNATIVES

This report evaluates three specific superstructure types, including estimated superstructure construction costs, and culminates with a recommendation for structure replacement. The three superstructure types investigated are as follows; steel beams with reinforced concrete deck, precast concrete NEXT beams, and precast concrete deck units. All three alternative superstructures are supported by new concrete abutments and reinforced concrete wingwalls on a deep foundation system.

Alternative I - Steel Beams Bridge
Alternative II - Precast NEXT Beams Bridge
Alternative III - Precast Deck Unit Bridge

All alternatives include the following:

- Close the bridge and detour traffic via local roads for an estimated duration of 8 to 10 months (or longer dependent on the time of year construction begins).
- Generally maintain the existing horizontal and vertical geometry of the roadway
- Removal of the entire existing bridge superstructure and existing substructure.
- Removal of the existing guide posts and guide rail within the project limits.
- Install a new superstructure supported by new concrete abutments and reinforced concrete wingwalls on a deep foundation system.
- Install membrane waterproofing and new hot mix asphalt overlay on top of the precast concrete deck units.
- Install new end anchorages and replace guide rail within the project limits.
- Install new approach walls at all four corners.
- Install new bridge rail.
- Full depth reconstruction of approximately 225 linear feet of roadway; including the bridge.
- Superstructure cost opinions projected to year 2016 construction costs, assuming 4% annual inflation with 25% for contingencies.

- Proposed hydraulic conditions that match existing hydraulic conditions and that result in no adverse hydraulic impacts or flood increases. Proposed low chord elevation to be at or above the existing low chord elevation.

Alternative I – Steel Beams Bridge: This alternative consists of the installation of a new steel beams with reinforced concrete deck superstructure to replace the existing superstructure. Six (6) foot long approach walls with concrete formliner are supported by the steel beams and concrete deck. In addition, this superstructure will also be constructed with new open aluminum bridge rail attached to the concrete parapets. See Appendix C, Sheet C1 for details.

Our opinion of the superstructure construction cost for Alternative I, based upon 2015 construction year cost figures projected to 2016, is **$730,000**. See Appendix D for a detailed cost breakdown.

Pros

1) None.

Cons

1) Future maintenance of the steel beams may be more involved and costly.
2) Not as long of a projected life-span.
3) Longer construction duration due to assembly of steel beams/diaphragms and cast-in-place concrete deck slab.
4) Largest structure depth, minimizing the hydraulic opening.

Alternative II – Precast NEXT Beams Bridge: This alternative consists of the installation of a new precast concrete NEXT beams superstructure to replace the existing superstructure. Six (6) foot long approach walls with concrete formliner are supported by the NEXT beams. In addition, this superstructure will also be constructed with new open aluminum bridge rail attached to the concrete parapets. See Appendix C, Sheet C2 for details.

Our opinion of the superstructure construction cost for Alternative II, based upon 2015 construction year cost figures projected to 2016, is **$410,000**. See Appendix D for a detailed cost breakdown.

Pros

1) Longer projected life-span than Alternative I.
2) Less frequent long-term future maintenance and less costly maintenance than Alternative I.
3) Longer projected life-span than Alternative I.
4) Shorter duration of construction than Alternative I due to the omission of a cast- in-place concrete deck slab; although slightly longer duration of construction than Alternative III due to the omission of a cast- in-place concrete closure pour.

5) Smaller structure depth than Alternative I, larger hydraulic opening than Alternative I.

Cons

1) Not as aesthetically pleasing.

Alternative III – Precast Deck Unit Bridge: This alternative consists of the installation of a new precast concrete deck unit's superstructure to replace the existing superstructure. Six (6) foot long approach walls with concrete formliner are supported by the concrete deck units. In addition, this superstructure will also be constructed with new open aluminum bridge rail attached to the concrete parapets. See Appendix C, Sheet C3 for details.

Our opinion of the superstructure construction cost for Alternative III, based upon 2015 construction year cost figures projected to 2016, is **$370,000**. See Appendix D for a detailed cost breakdown.

Pros

1) Longer projected life-span than Alternative I.
2) Shorter duration of construction than Alternative I due to the omission of a cast- in-place concrete deck slab. Slightly shorter duration of construction than Alternative II due to the omission of a cast- in-place concrete closure pour.
3) Less frequent long-term future maintenance and less costly maintenance than Alternative I.
4) Smallest structure depth, maximizing the hydraulic opening.

Cons

1) None.

VII. COST SUMMARY & RECOMMENDATION

Table 5 – Superstructure Construction Cost Summary Table:

Alternative:	Structure Type:	2016 Cost Opinion*
Alternative I	Steel Beams Bridge	**$730,000**
Alternative II	Precast NEXT Beams Bridge	**$410,000**
Alternative III	Precast Deck Unit Bridge	**$370,000**

***Note: The Cost Opinion construction cost is for the superstructure components only. Costs for the bridge substructure and roadway related items will remain constant for each alternative.**

Recommendation:

Alternative III, replacing the existing structure with a precast concrete deck unit superstructure supported by new concrete abutments and reinforced concrete wingwalls on a deep foundation system, is the recommended alternative for the following reasons:

1. The estimated 2016 superstructure construction cost of $370,000 for Alternative III is less than both Alternative I and Alternative II.
2. The estimated construction duration for Alternative III is the shortest (no construction of cast-in-place concrete deck slab and no construction of concrete closure pours required) of the alternatives evaluated.
3. Future maintenance of the precast concrete deck units is anticipated to be infrequent and least costly.
4. Life-span of precast concrete deck units is anticipated to be the longest of the alternatives evaluated.
5. Smallest structure depth, maximizing the hydraulic opening.

APPENDIX - A

Photographs

Photo #1 – Merryall Road looking at downstream parapet

Photo #2 - Merryall Road looking at upstream parapet

Photo #3 - Merryall Road looking downstream

Photo #4 - Merryall Road looking upstream

Photo #5 - Merryall Road looking north

Photo #6 - Merryall Road looking south

APPENDIX – B

ConnDOT Bridge Inspection Report

STRUCTURE NO. 05118

MERRYALL ROAD
over
WEST ASPETUCK RIVER
NEW MILFORD

Routine Inspection
on
10/25/2012

Inspected by Team 1
for Area 1

TEAM: Forwarded to TE3 Ned Statchen Date 10/26/2012

TE3: Reviewed by TE3 N. Statchen Date 1/10/2013

BMM Required No

Town Bridge YES

Rating <= 5 (Items 58,59,60 or 62) YES

Rating Change 2 or More Values NO

Forwarded to Supervisor Leo Cain Date 1/10/2013 with Bri-8 for Town letter

Forwarded to "To Be Copied Drawer" ☐ Date

Date BRI-19 Entered 1/10/2013

Need report back for town letter. -NTS

SUPERVISOR: Reviewed by Supervisor Leo Cain Jr. Date 7/17/2013

SUPPORT: Date Copies Made 08/02/13 BMM No Town Letter

Scanned By: DPS Date Scanned 08/02/13 PDF Box No

NBI: Yes

State of Connecticut
Department of Transportation
Bureau of Engineering and Construction

Inspection Report Transmittal Form
Form BRI-27, Rev. 8/09

Structure No.	05118	**Town**	New Milford
Inspection Date	10/25/2012	**Inspectors**	Team One

TABLE OF CONTENTS

Loose Forms (not bound in report)

			Number of Sheets Enclosed
Maintenance Memo			
Flagging Memos			
PONTIS Element Data Collection Form			2
Plan Sheets	Already on File	☐	

Bound Report Pages

Title Cover Sheet		1
Table of Contents		1
Executive Summary		
Field Notes		
Calculations:	Load Rating Evaluation	
	Quantities & Cost Estimate	
Photo Sheets		11
Photo Images		22

Forms

BRI-18 Bridge Inspection Report Form	8
BRI-19 Highway Bridge Inventory Form	2

Comments:

Bridge Number **05118**

Inspected By: D. McClure & R. Hew

Sufficiency Rating 60.10
Previous Inspection Date 11/16/2011

BS&E Received ☐ Data Entry By: NTS
Copies Made ☐ Data Entry Date: 1/10/2013

STATE OF CONNECTICUT
DEPARTMENT OF TRANSPORTATION
BRIDGE SAFETY & EVALUATION

STRUCTURE EVALUATION

SHEET 1 OF 2 FORM BRI-19 REV 10/00

SHEET_____ OF_____

90) Inspection Date	Inspection Team	91) Frequency	Class:
10/25/12	1	12	01
Indepth Insp	**Deck Survey**	**Access**	**Flagman**
11/29/2010	1/1/1900	0	

CRITICAL FEATURE INSPECTIONS

	Type	Frequency	Team	Date
Fracture:				
Uwater:				
Special:			0	

RED FLAG ☐

IDENTIFICATION

Bridge Name
Town Name NEW MILFORD Town Code 52630
5) Inventory Route:
A) Record Type 1 D) Route Number 00000
B) Signing Prefix 5 City Street E) Directional Suffix 0 NA
C) Level of Service 0 None of the bel
6) Feature Intersected WEST ASPETUCK RIVER
7) Facility Carried: MERRYALL ROAD
9) Location JCT OF W MEETINGHOUSE RD
11) Milepoint 1.60 Miles
16) Latitude 41deg 37 min 36.00 sec deg min . sec
17) Longitude 73deg 25 min 18.00 sec deg min . sec
98) Border Bridge:
A) State Code B) Percent Responsibility %
C) Border Town Name
99) Border Bridge Structure No

STRUCTURE TYPE AND MATERIAL

43) Structure Type, Main:
A) Material 1 Concrete B) Design Type 4 Tee Beam
44) Structure Type, Approach:
A) Material 0 Other B) Design Type 0 Other
45) Number of Spans, Main Unit 1
46) Number of Approach Spans 0
107) Deck Structure Type 1 Concrete Cast-in-Place
108) Wearing Surface/Protective System:
A) Type of Wearing Surface 6 Bituminous
B) Type of Membrane 0 None
C) Type of Deck Protection 0 None

AGE AND SERVICE

27) Year Built 1937 106) Year Reconstructed
42) Type of Service:
A) On 1 Highway B) Under 5 WATERWAY
28) Number of Lanes:
A) On 2 B) Under
29) Average Daily Traffic 1122 ~~0017~~ Half ADT?: No
109) Percent Truck 4% 6000 - DOT TRAFFIC
30) Year of ADT 2010 ADT Map 2012
19) Bypass, Detour Length miles 02

GEOMETRIC DATA

48) Length of Max Span 31ft
49) Structure Length 35ft
50) Curb or Sidewalk Widths:
A) Left 0.5ft B) Right 0.5ft ft
51) Brg Rdwy width,curb-curb 30.0ft ft
52) Deck Width, Out-Out 35.0ft ft
32) Approach Roadway Width 35ft ft
33) Bridge Median 0 No Median
Deck Area 1225 sqft sqft
34) Skew Angle 49deg
35) Structure Flared 0
10)Inv. Rte. Min. Vert Clearance 99ft 99in ft in
47) Log Inv. Rte. Total Horiz Clr.: 30.0ft ft
47) RLog Inv. Rte. Total Horiz. Clr.: ft ft
53) Min Vert Clearance Over Bridge 99ft 99in ft in
54) Min Vert Under Clearance N Ref 0ft 0in Ref ft in
55) Min Lat Under Clearance on Right N Ref 99.9ft Ref ft
56) Min Lat Under Clearance on Left 0.0ft ft

BRIDGE COMMENTS

No current project per 12/27/12 projects list update - NTS

STRUCTURE EVALUATION

SHEET 2 OF 2 FORM BRI-19 REV 10/00

SHEET_____ OF_____

Bridge Number	05118	NBIS Length
Town Name	NEW MILFORD	Yes 35
Facility Carried	MERRYALL ROAD	
Feature Crossed	WEST ASPETUCK RIVER	

Inspected By: D. McClane & K. Klein

CLASSIFICATION

112) NBIS Bridge Length	Yes	
104) Highway System	0	Off System
26) Functional Class	17	Urban Collector
100) Defense Highway	0	Route is not a STRAHNET Route
101) Parallel Structure	N	No parallel structure exists
102) Direction of Traffic	2	2-way traffic
103) Temporary Structure		
110) Designated National Network	0	Not on national network
20) Toll	3	On Free Road
21) Maintain	3	Town or Township Highway Agency
22) Owner	3	Town or Township Highway Agency
Report Class	L	LOCAL
37) Historical Significance	5	Bridge is not eligible for National Register

WATERWAY

DrainageBasinCode	6500	
38) Navigation Control	0	No navigation control on waterway
39) Navigation Vert Clr.	0	40) Navigation Horiz Clr. 0
116) Vert-Lift Brg Nav Min		
111) Pier Abutment Protection		

PROPOSED IMPROVEMENTS

75A) Type of Work Proposed		
75B) Work Done By		
76) Length of Struct. Improvement		ft
94) Bridge Improvement Cost	$	
95) Roadway Improvement Cost	$	
96) Total Project Cost	$	
97) Year of Improvement Cost Est.		
114) Future ADT		115) Year Future ADT
List No.	Project No.	Advertised

POSTED SIGNS & UTILITIES

Other Posted Signs 1	7	Sharp Curve		
Other Posted Signs 2				
Actual P.L. Single Unit Truck	tons	Actual P.L. 4Axle Truck	tons	
Rec. P.L. Single Unit Truck	tons	Rec. P.L. 4Axle Truck	tons	
Actual P.L. Semi-TrailerTruck	tons	Actual P.L. 3S2 Truck	tons	
Rec. P.L. Semi-TrailerTruck	tons	Rec. P.L. 3S2 Truck	tons	
Rec. P.L. All Vehicles	tons	Actual P.L. All Vehicles	tons	
Posted Vert Clearance On Bridge	ft in		ft	In
Posted Vert UnderClearance	ft in		ft	In
Posted Speed Limit	mph			mph
Utility				

LOAD RATING AND POSTING

31) Design Load	4	Evaluation Code	L
63) Operating Rating Type	1	Year of Evaluation	1999
64) Operating Rating	83.0	70) Bridge Posting	5
65) Inventory Rating Type	1	41) Structure Status	A
66) Inventory Rating	50.0		

CONDITION

		Rating	By
58) Deck	6	✓	NTB
59) Superstructure	4	1	D.MC
60) Substructure	4	1	D.MC
61) Channel & Chan. Protection	6	1	D.MC
62) Culverts	N	1	

APPRAISALS

		Rating	By
67) Structure Evaluation	4	4	NTB
68) Deck Geometry	5		D.MC
69) Under Clear Vert & Horiz	N		
71) Waterway Adequacy	6		D.MC
72) Approach Rdwy Alignment	6		D.MC
113) Scour Critical	8		

Items 58 Thru 72 Checked By: NTB

36) Traffic Safety Features:

A) Bridge Railings	0	0
B) Transitions	0	0
C) Approach Guardrail	0	0
D) Approach Guardrail End	0	0

OTHER FEATURES

Fence Required	No	Barrel Ladder	No	
Fence Present	No	Stand Pipes	No	
Fence Height	0.0 ft	Cat Walks	No	
Fence Type		Movable Inspection System	No	
Fence Material		Loose Concrete Checked?	No	
Fence Top Type				

INSPECTION COMMENTS

Proposed Next Indepth Insp Year	2020
Senior	Leo Cain Jr.
Supervisor	Theodore Lapierr

REVIEWED BY: Ted Bstatler Date 1/10/2012

Connecticut Department of Transportation

Bridge Inspection Report BRI-18

Bridge #: 05118 **Inspection Date: 10/25/2012**

Inspection Type:	Routine	**Previous Inspection Date:**	11/29/2010	**Snooper Required:**	No
Inspection Performed By:	Team 1	**Feature Carried:**	MERRYALL ROAD	**Snooper Used:**	No
Town:	NEW MILFORD	**Feature Intersected:**	WEST ASPETUCK RIVER	**Year Built:**	1937
Location:	JCT OF W MEETINGHOUSE RD	**Main Design:**	Tee Beam	**Year Rebuilt:**	-
Main Material:	Concrete				

Visits

Visit Date:	Temp:	Start Time:	End Time:
10/25/2012	62	10:30:00 AM	12:30:00 PM

Inspectors:

Inspector:	Task:
D. McClave	Lead Inspector
K. Weir	Inspector

DECK: REINFORCED CONCRETE DECK **Overall Rating:** 6

	Rating	
OVERLAY:	6	(BITUMINOUS CONCRETE)- There is an open {up to 2 inches} longitudinal crack down the centerline and other short intermittent longitudinal cracks adjacent to the centerline.Small spalls along the longitudinal cracks and a few bituminous patches along the centerline.Northbound is the worse condition. Curb reveals: West, 5 1/2 ". East, 2 1/4 ". Photos 1 & 2.
DECK-STR. CONDITION:	6	(UNDERSIDE)- The rating is based on the overlay according to the B.I.M.
CURBS:	5	(CONCRETE)- The West side has 22 linear feet of severe scale up to 4 inches deep and punky concrete. The East side has 12 linear feet of severe scale and punky concrete up to 4 inches deep. Photos 3 & 4.
MEDIAN:	N	-
SIDEWALKS:	N	-
PARAPET:	4	(CONCRETE RAILBASE)- West side has a total of 35 linear feet of severe scale and punky concrete, surface spalls and hollow areas.The outside face has 25 linear feet of severe scale. East side has 27 linear feet of the same condition as the West side.The outside face has 18 linear feet of severe scale.

		The concrete end post at the SW has an area of severe scale on the cap with exposed rusted rebar. Photos 3 & 4.
RAILING:	6	(CONCRETE SPINDLE)- Fine vertical and horizontal hairline cracks. Isolated small surface spalls. Light scale at the cap and ends.
PAINT:	N	-
FENCE:	N	-
DRAINS:	N	-
LIGHTING STANDARD:	N	-
UTILITIES TYPE/SIZE:	N	-
CONSTR JOINTS:	N	-
EXPANSION JOINTS:	N	-

NTS

59. SUPERSTRUCTURE: REINFORCED CONCRETE TEE BEAMS (5)

Overall Rating: 4

	Rating	
BEARING DEVICES:	5	It was observed a few beams have thin felt paper, most seem to not have the material under the beam.
STRINGERS:	4	(CONCRETE TEE BEAMS)-The underside {which is the top flange of the beams} shows areas of map cracking with efflo. stains and stalactities. Random hollow and spalled areas with exposed rusted rebar Some section loss on the rebars.Areas of light to medium scale. Concrete Tee -Beams-There are a total of 5 beams.Beams 1-4 show areas of light to medium scale, mostly on the webs. There are pop outs and a few hollow areas, mostly on the soffit of the beams. Beam # 1 has a 20 inch x 20 inch x 3 inch deep spall with exposed rusted rebar on the soffit of the beam. There is an adjacent small spall. Beam # 5 is the worse condition with numerous longitudinal cracks with efflo. stains and stag candles on the soffit. Longitudinal cracks with efflo. and areas of severe scale and punky concrete on the webs.At the north end on the east fascia there are [2] small surface spalls with exposed rusted rebar. See attached sketches and photos 9-14.
GIRDERS:	N	-
FLOOR BEAMS:	N	-
TRUSSES-GENERAL:	N	-
TRUSSES-PORTALS:	N	-
TRUSSES-BRACING:	N	-
PAINT:	N	-
RUST:	N	-
MACHINERY MOV SPAN:	N	-
RIVETS & BOLTS:	N	-
WELDS - CRACKS:	N	-
TIMBER DECAY:	N	-
CONCRETE CRACKING:	4	See above items.
COLLISION DAMAGE:	N	-
MEMBER ALIGNMENT:	8	-
DEFLECT. UNDER LOAD:	N	-
VIBRATION UNDER LOAD:	N	-
STAND PIPES:		

	N	-
BARREL LADDERS:	N	-

ARE BARREL LADDERS OSHA COMPLIANT? -

---

60. SUBSTRUCTURE: CONCRETE **Overall Rating:** 4

	Rating	
ABUTMENTS-STEM:	4	(CONCRETE)- Abutment # 1 has approximately 40 square feet of severe scale up to 2 1/2 inches deep, mostly under the weep drains at the lower part of the stem. There is a vertical crack open up 1/4 inch in bay # 3. No change during this inspection, 2012. There is 20 square feet of severe scale and hollow area under beam # 4 at the lower part of the stem. Efflo. stains under beam # 5.Some graffiti on the stem. Abutment # 2 has approximately 42 square feet of severe scale up to 2 1/2 inches deep and up to 1 foot deep under beam # 5. Areas of severe scale are around the weep drains at the lower part of the stem.These areas have exposed rusted rebar.Random vertical cracks. There is graffiti on the stem.There is approximately 6 square feet of hollow areas. See attached sketches and photos 15-18.
ABUTMENTS-BACKWALL:	6	(CONCRETE)- Backwall # 1- has a 2 foot x 1 foot hollow area and a vertical crack between beams 1 & 2.There are horizontal cracks with efflo. at the east end. Backwall # 2- has several small surface spalls a vertical crack and a hollow area at the east end 18 inches high x 6 inches wide. See attached sketches.
ABUTMENTS-FOOTINGS:	N	Not visible.
ABUTMENTS-SETTLEMENT:	6	See above comments.
ABUTMENTS-WINGWALLS:	4	(CONCRETE)- NW has areas of severe scale and punky concrete with exposed rebar, some rusted through.The cap also shows 25 LF of severe scale at the top near the abutment.The rest of the cap is covered with dirt.There is a spall with exposed rusted rebars 4 feet x 3 feet x 2 inches deep at the base.Also,spall with exposed rusted rebar 4 feet x 2 feet x 4 inches deep with trees growing out of the joint with the abutment. NE- has 15 square feet of severe scale at the cap and severe scale at the base of the stem, 2 feet high x 12 feet long x 2 inches deep with exposed rusted rebar. A rebar at the free end that is exposed and rusted that protrudes out.Erosion at the free end. and a wash out behind the wingwall near the roadway. SW- horizontal cracks with efflo. stains and 15 linear feet of severe scale at the cap.The stem has vertical cracks with efflo.Severe scale at the base up to 2 inches deep.The joint with abutment # 1 is open 1 inch. SE- areas of severe scale below the weep drains. The cap is covered with dirt and is not visible.A diagonal crack and erosion at the free end. See attached sketches and photos 19 & 20.

		Brush around all wingwalls should be cut.
PIERS/BENTS-CAPS:	N	-
PIERS/BENTS-PILE BENT:	N	-
PIERS/BENTS-COLUMNS:	N	-
PIERS/BENTS-FOOTING:	N	-
PIERS/BENTS-SETTLMT:	N	-
EROSION-SCOUR:	6	There is a scour pool at the outlet end of abutment # 2, up to 32 inches deep not affecting the abutment. See comments under channel.No undermining along the abutments. There is erosion behind the NE & SE wingwalls.
CONCRETE CRACK-SPALL:	4	See items above.
STEEL CORROSION:	N	-
PAINT:	N	-
TIMBER DECAY:	N	-
COLLISION DAMAGE:	N	-
DEBRIS:	7	Birds nests and sand on the seats.

---

61. CHANNEL & CHANNEL PROTECTION:	-	Overall Rating:	6

	Rating	
CHANNEL SCOUR:	6	Item 113 is rated " 8 ".Deeper pool of water towards the outlet end that starts at beam # 4 and is up to 32 inches deep.No undermining at either abutment.No scour issues.
EMBANKMENT EROSION:	6	Undercutting up and downstream of the embankments with tree roots exposed.Up to 4 feet high downstream, northside.
DEBRIS:	6	Old timber piles protrude from the channel bed in front of both stems. There are large boulders throughout the channel. Further downstream there is a cluster of logs and debris that is also restricting the flow.
VEGETATION:	6	Trees and brush along the embankments some of which are overhanging the channel and in the channel itself.
CHANNEL CHANGE:	7	Channel bed is comprised of large stones and boulders.Good flow under the structure Channel is narrow at the inlet end and is wider under the structure and downstream. Deeper pool of water towards the outlet end up to 32 inches deep. Inlet end, 18 inches deep. Photos 21 & 22.
FENDER SYSTEM:	N	-
SPUR, DIKES & JETTIES:	N	-

RIP RAP:	7	Large boulders in place along both abutments and along the embankments.

---

62. CULVERTS & RETAINING WALL:	-	**Overall Rating:**	N

---

65. APPROACH CONDITION	-	**Overall Rating:**	5

	Rating	
APPROACH SLAB:	N	-
RELIEF JOINTS:	N	-
APPROACH GUIDE RAIL:	5	(TWO WIRE ROPE RAILS)- SE, NW & NE the posts are checked and split.Rust on the cables. SW, has {3] posts and no cables.One post is broken at ground level.{ Photo # 5}. SE, loose and slack cables.
APPROACH PAVEMENT:	6	(BITUMINOUS CONCRETE)- South approach has a longitudinal cracks and short transverse cracks open up to 1/2 inch. North approach has an open {up to 2 inches} longitudinal crack down the centerline with bituminous patches in the crack and adjacent longitudinal and transverse cracks.
APPROACH EMBANKMENT:	5	Erosion at the SE corner that is 15 feet wide x 3 feet deep. This area needs rip-rap.{See photo # 6}. Wash out behind the northeast, wingwall.

TRAFFIC SAFETY FEATURES

	Rating	
BRIDGE RAILINGS:	Last Inspection: 0 Current: -	Does not meet current standards.
TRANSITIONS:	Last Inspection: 0 Current: -	Does not meet current standards.
APPROACH GUARDRAILS:	Last Inspection: 0 Current: -	Does not meet current standards.
APPR. GUARDRAIL ENDS:	Last Inspection: 0 Current: -	Does not meet current standards.

---

66. LOAD POSTING

	- Posted Loading -	
SINGLE UNIT (TONS):	Last Inspection: - Current: -	-
SEMI TRAILER (TONS):	Last Inspection: - Current: -	-
4 AXLE (TONS):	Last Inspection: - Current: -	-
3S2 (TONS):	Last Inspection: - Current: -	-
ADVANCE WARNING (Y/N):	-	-
LEGIBILITY:	-	-
VISIBILITY/LOCATION:	-	-

67. MISCELLANEOUS

	Rating	
MIN. VERT. UNDERCLEARANCE:	Last Inspection: 0' 0" Current: -' -"	-
POSTED CLR. UNDER BRIDGE:	Last Inspection: -' -" Current: -' -"	-
POSTED CLR. ON BRIDGE:	Last Inspection: -' -" Current: -' -"	-
ADVANCED WARNING (YES/NO):	No	-
SPEED LIMIT (IF ANY):	Last Inspection: - Current: -	-
CHARACTER OF TRAFIC:		ADT-~~1144.~~ 600

ADDITIONAL NOTES:	Chest waders were used for this inspection. Also, the 16 foot extension ladder.
ADDITIONAL	- N. Statchen checked on bridge following inspection. - NTS later that day.

COMMENTS:

Inspectors' Signatures:	1) Duncan McClane	Date: 10/29/2012
	2) [signature]	Date: 10/30/2012
	3)	Date: ----/----/-----
	4)	Date: ----/----/-----
P.E. Signature:		Date: ----/----/-----
P.E. #:		Date: ----/----/-----
Reviewed by:	[signature] conndot	Date: 1/10/2013

BRIDGE 05118 - MERRYALL RD O/ WEST ASPATUCK RIVER - N MILFORD

BEAM #1

11-29-2010

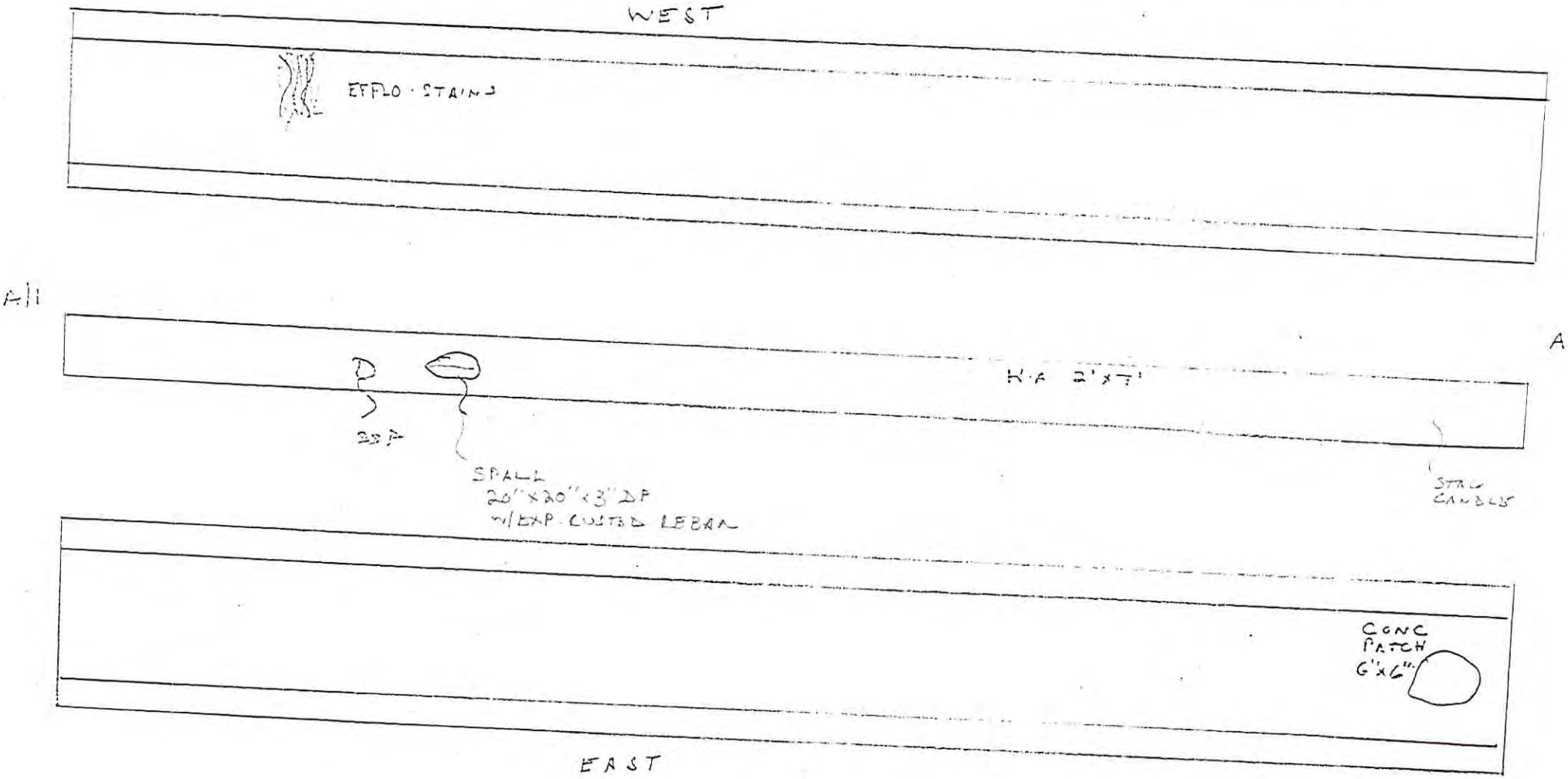

	90125.12	TEAM 1
NO.	DATE	DESCRIPTION
REVISIONS		

BRIDGE 05118 - MERRYALL RD. o/ WEST NEPETUCK RIVER - N. MILFORD

BEAM # 2

11.29.2010

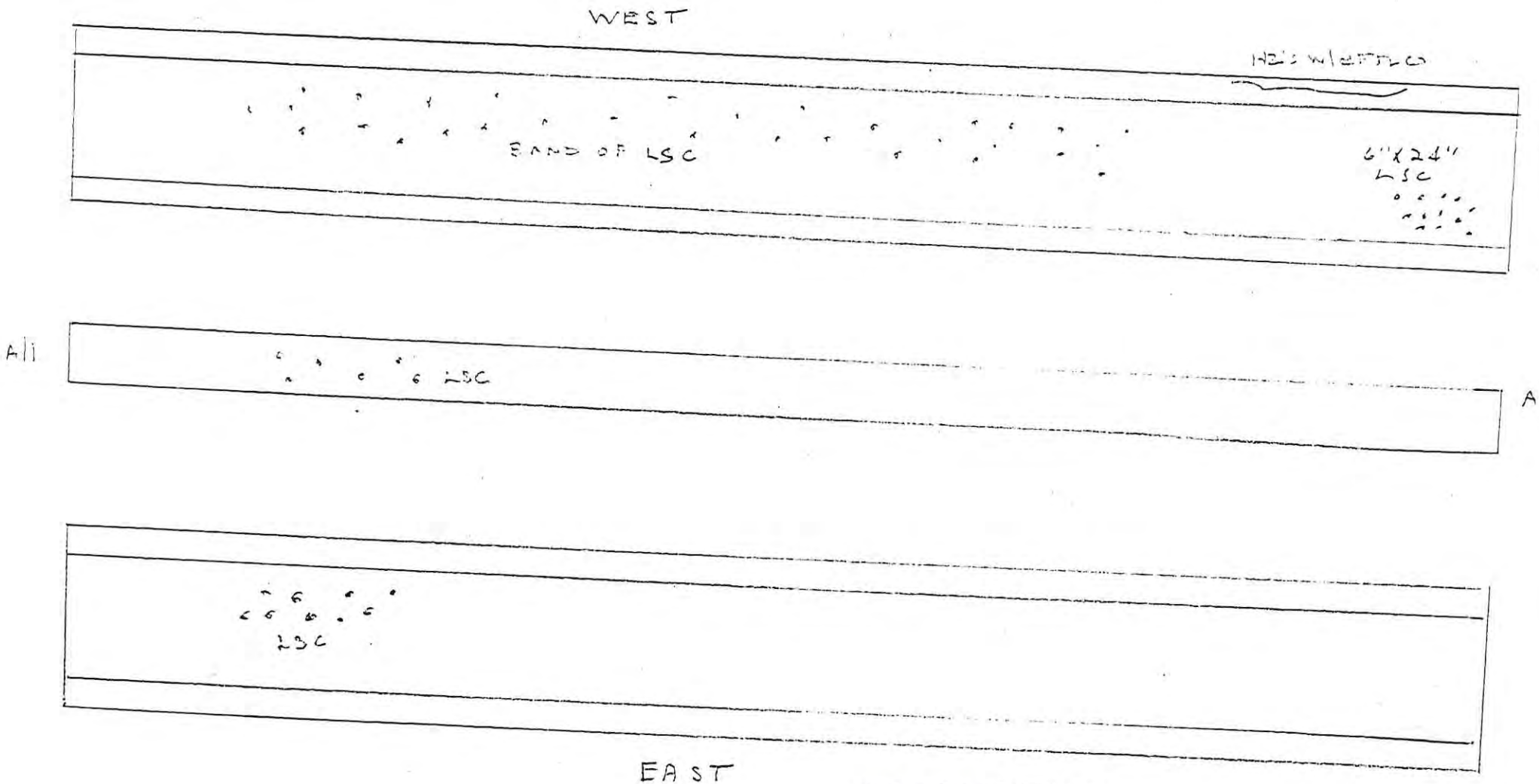

	10.25.12	TRAM 1
NO.	DATE	DESCRIPTION
REVISIONS		

BRIDGE 05118 - MERRYALL RD. o/ WEST ASPETUCK RIVER N. MILFORD
BEAM #3
11-29-2010

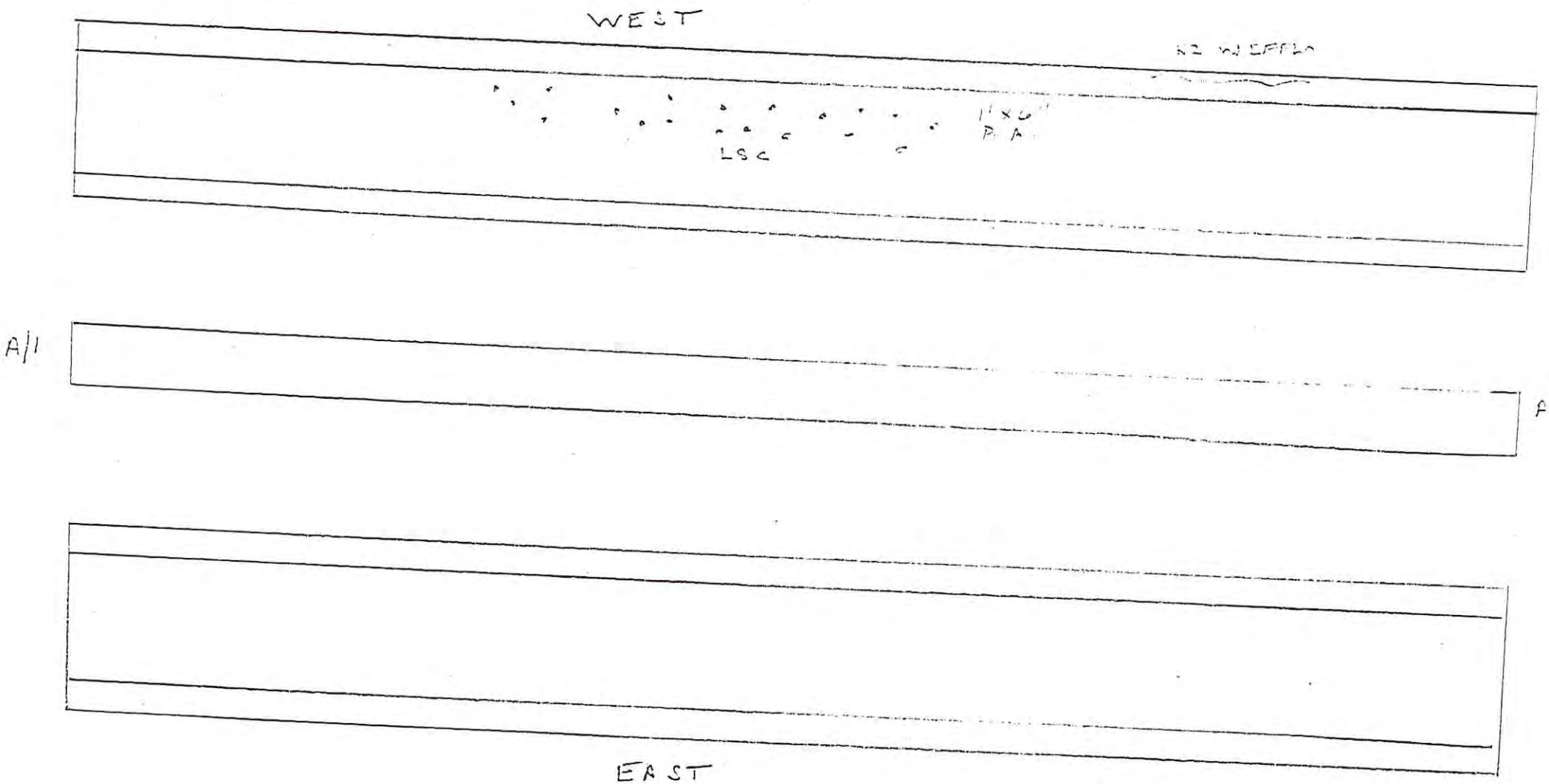

NO.	DATE	DESCRIPTION
	10-25-12	TRAN 1

REVISIONS

BRIDGE 05118 - MERRYALL RD o/ WEST BRANCH TUCK RIVER - N MILFORD
BEAM # 4

11-29-2010

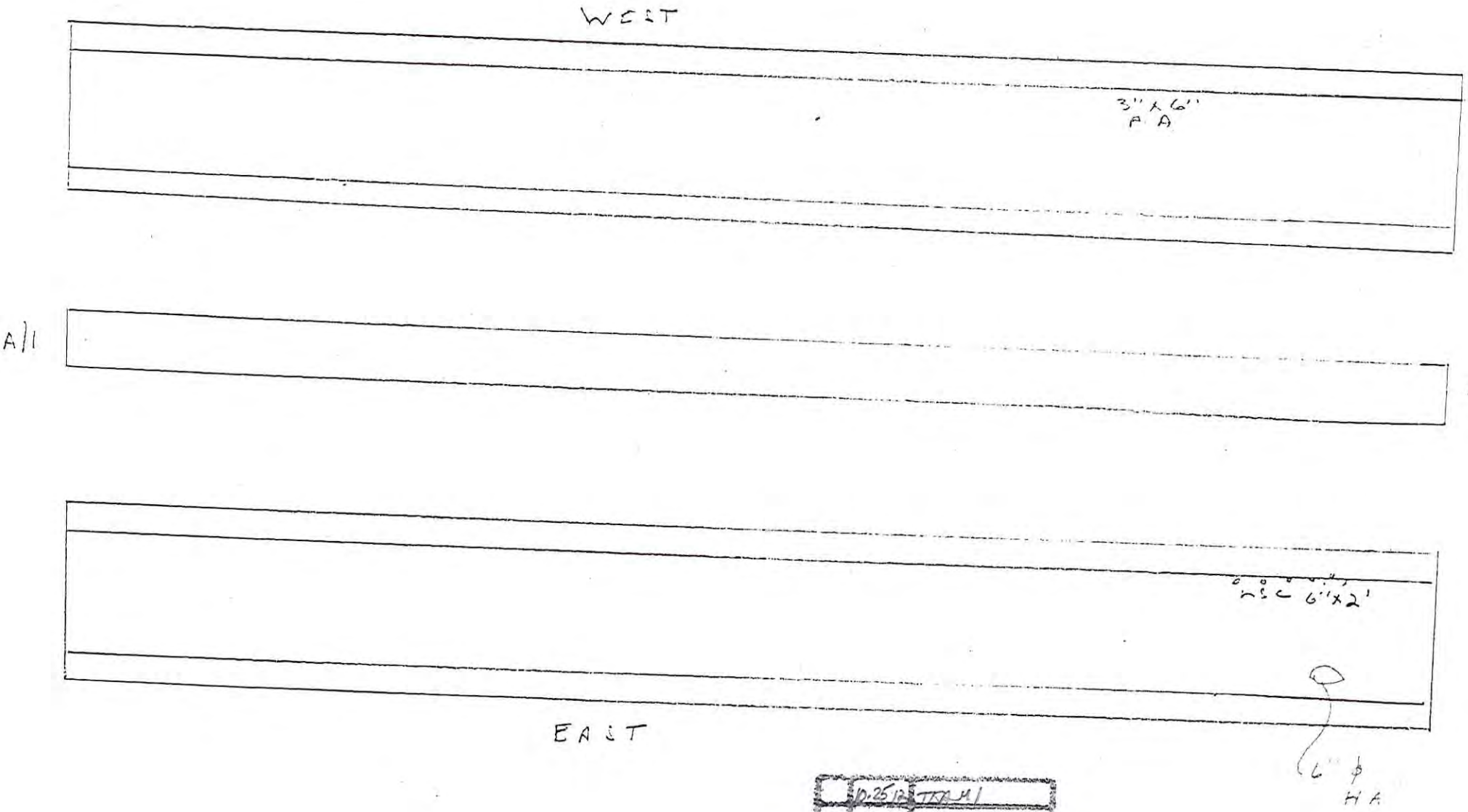

NO.	DATE	DESCRIPTION
	12-26-12	TXM

BRIDGE 05118 - MERRYALL RD. O/ WEST RIVER - N MILFORD
BEAM # 5
11.29.2010

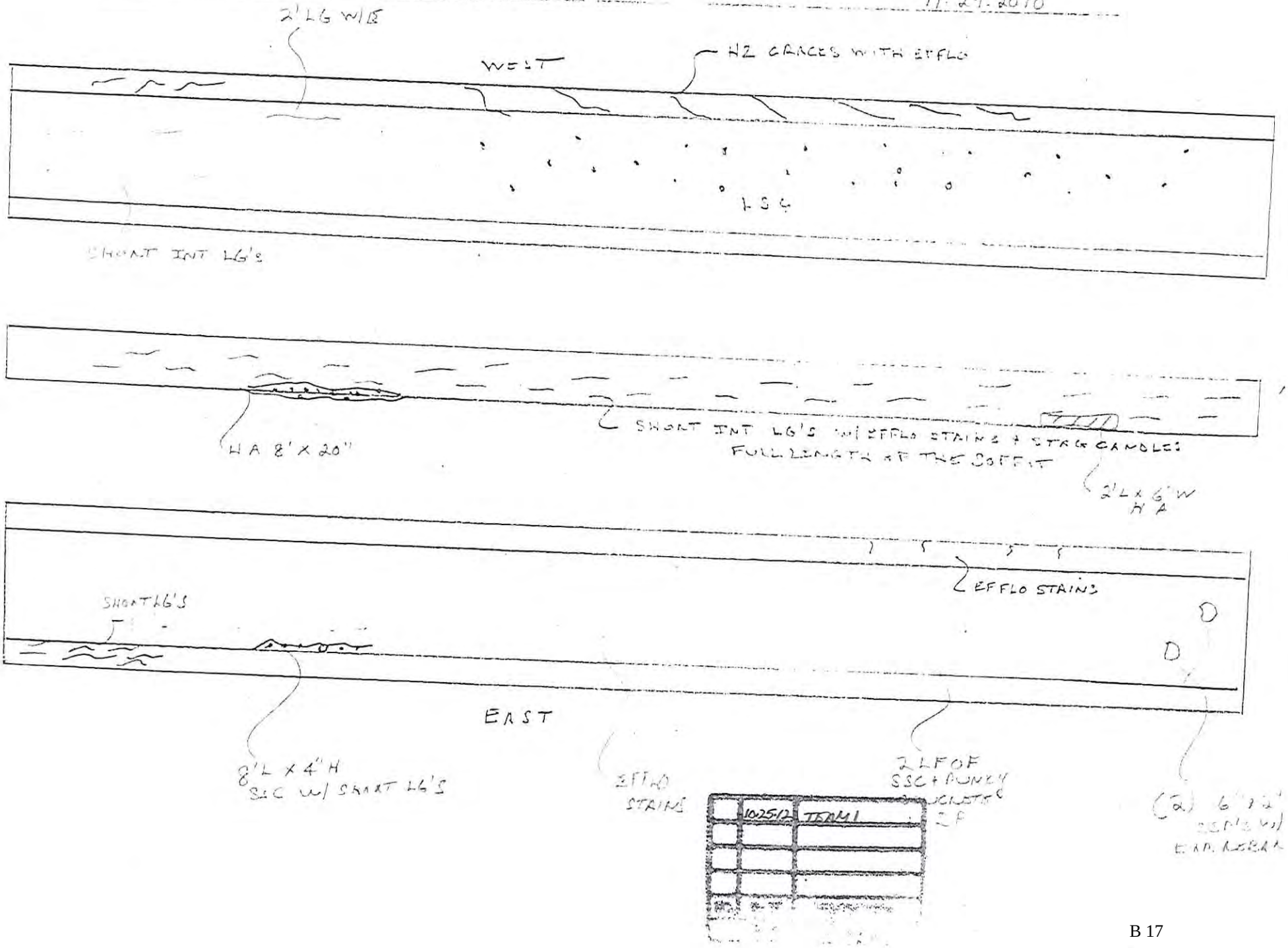

BRIDGE 05118 MERRYALL RD. O/WEST ASPETOCK RIVER - NEW MILFORD
UNDERSIDE (TOP FLANGE) 11.29.2010

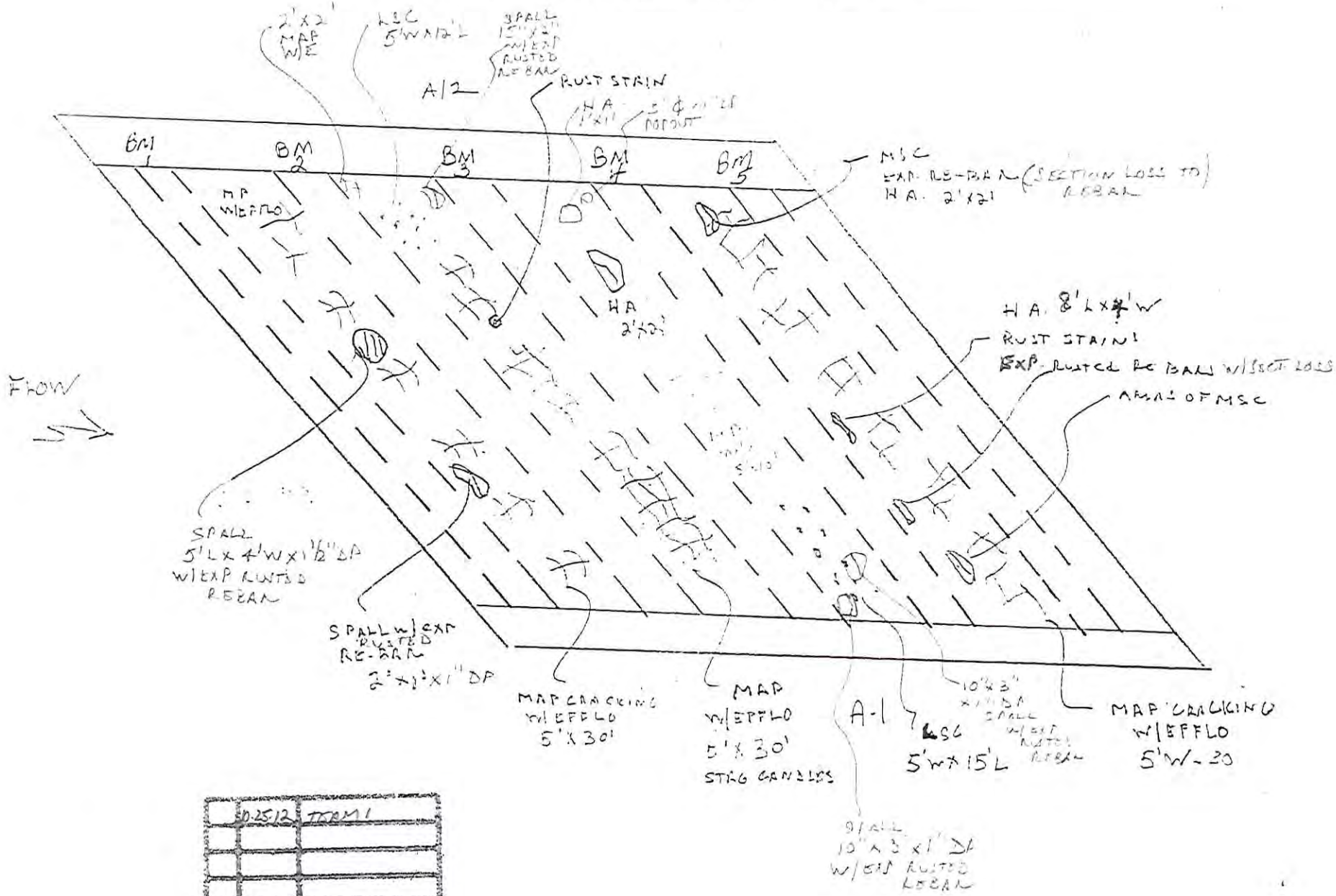

	10.25.12	TEAM 1
NO.	DATE	DESCRIPTION
REVISIONS		

BRIDGE 05118 - MERRYALL RD O/ WEST ASPETUCK RIVER NEW MILFORD
SOUTH ABUTMENT 11.29.2010

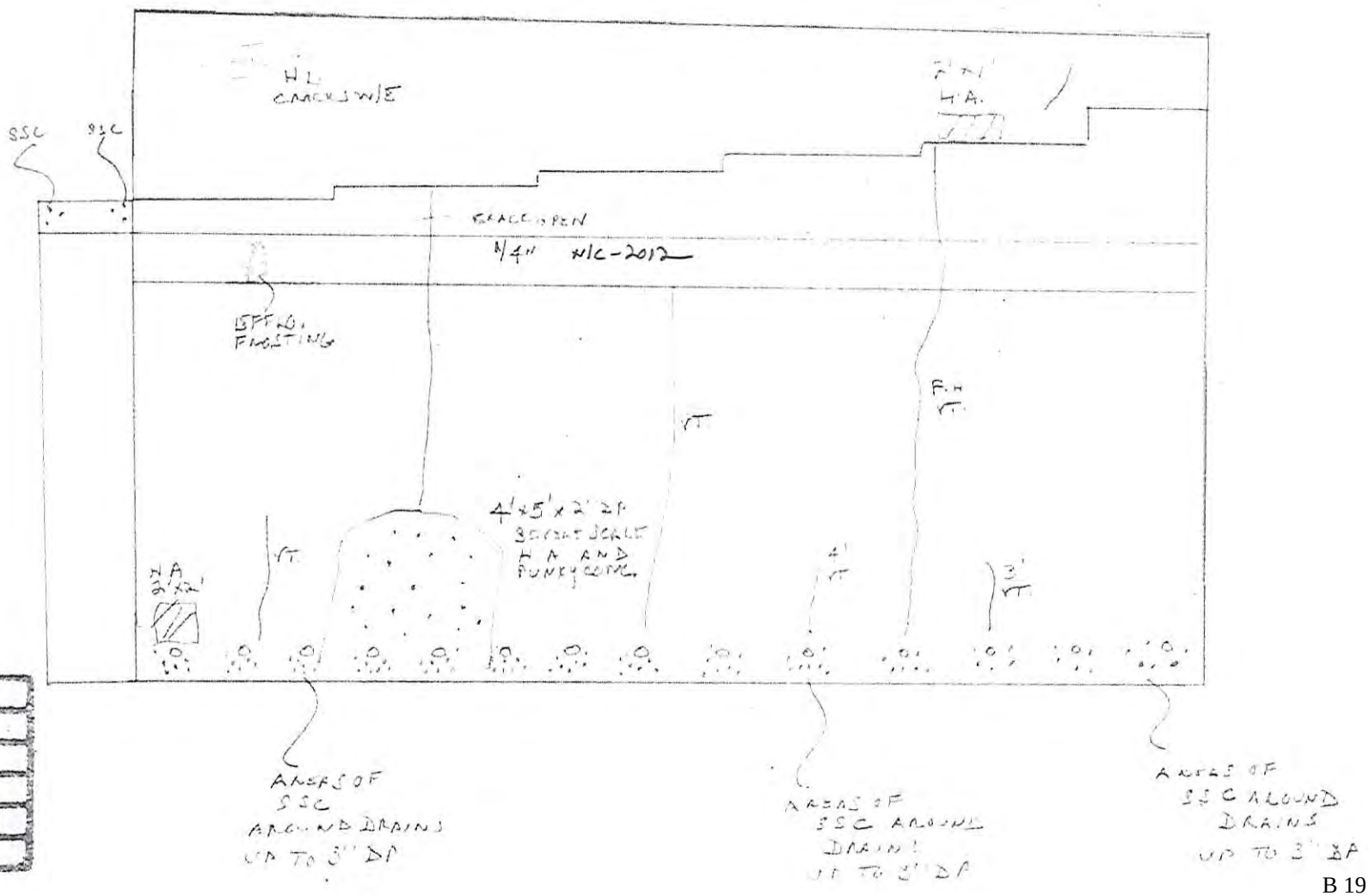

	10.25.12	TEAM 1
NO.	DATE	DESCRIPTION
REVISIONS		

BRIDGE 05118 MERRYALL RD o/ WEST ASPETUCK RIVER-NEW MILFORD
NORTH ABUTMENT 11.29.2010

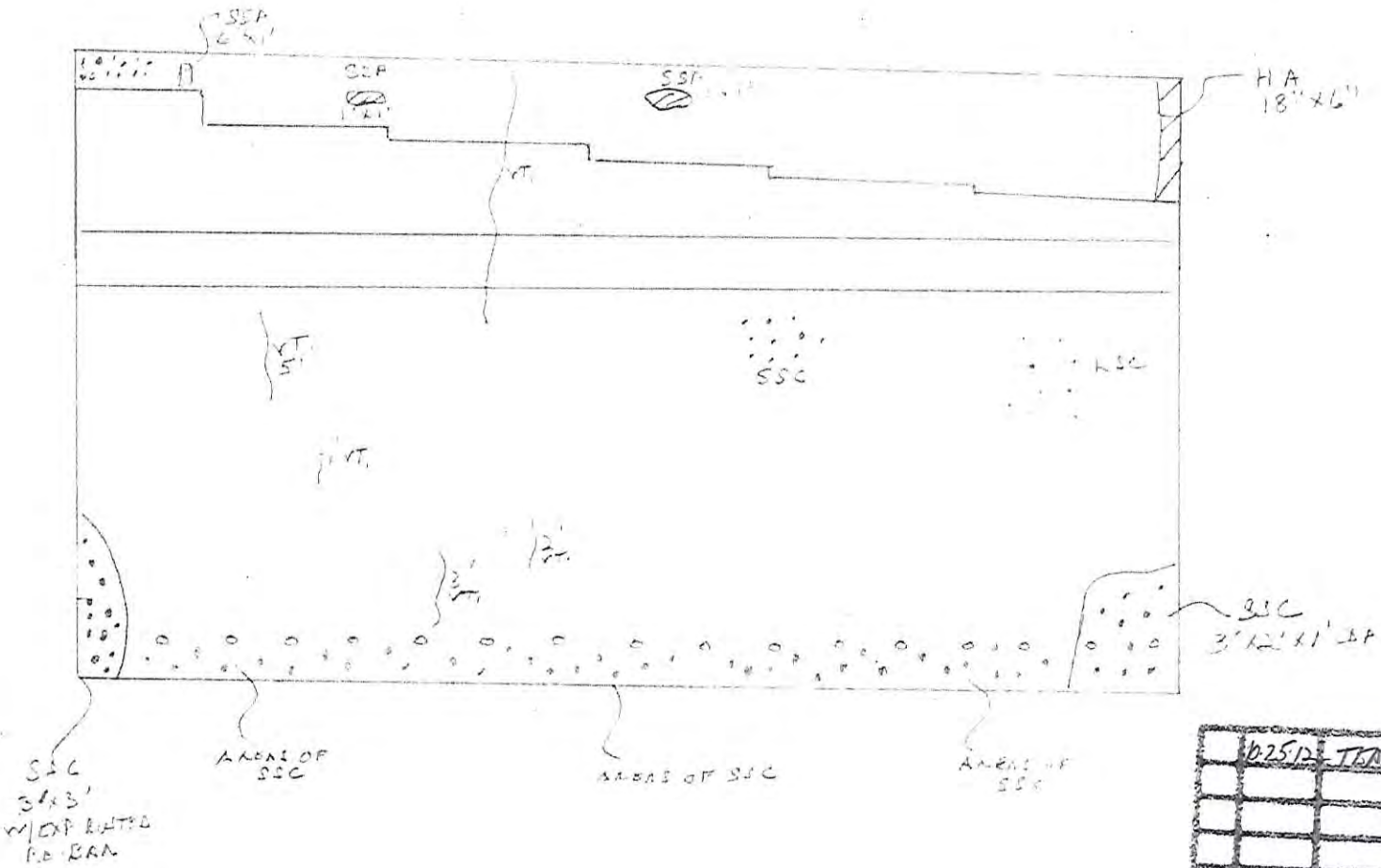

	10.25.12	TEAM 1
NO.	DATE	DESCRIPTION
REVISIONS		

BRIDGE 05118 - MERRYALL RD. O/ WEST ASPETUCK RD - NEW MILFORD
11-29-2010

SE - W/W

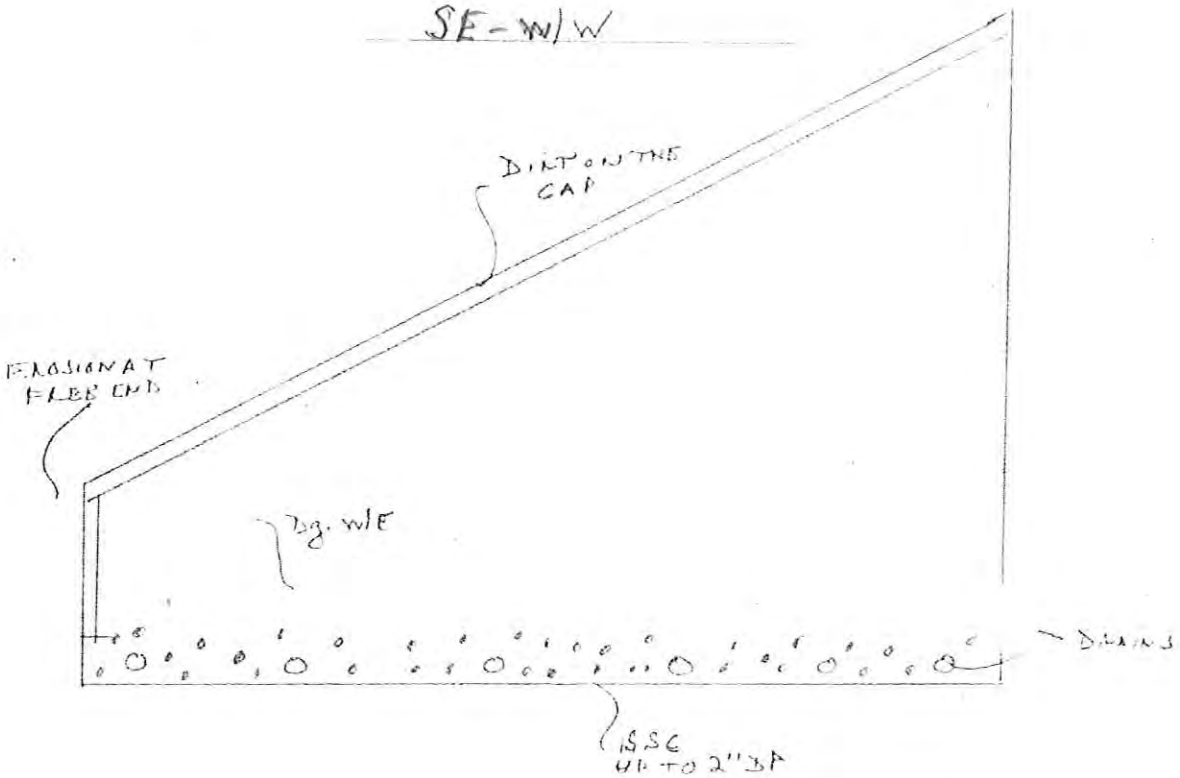

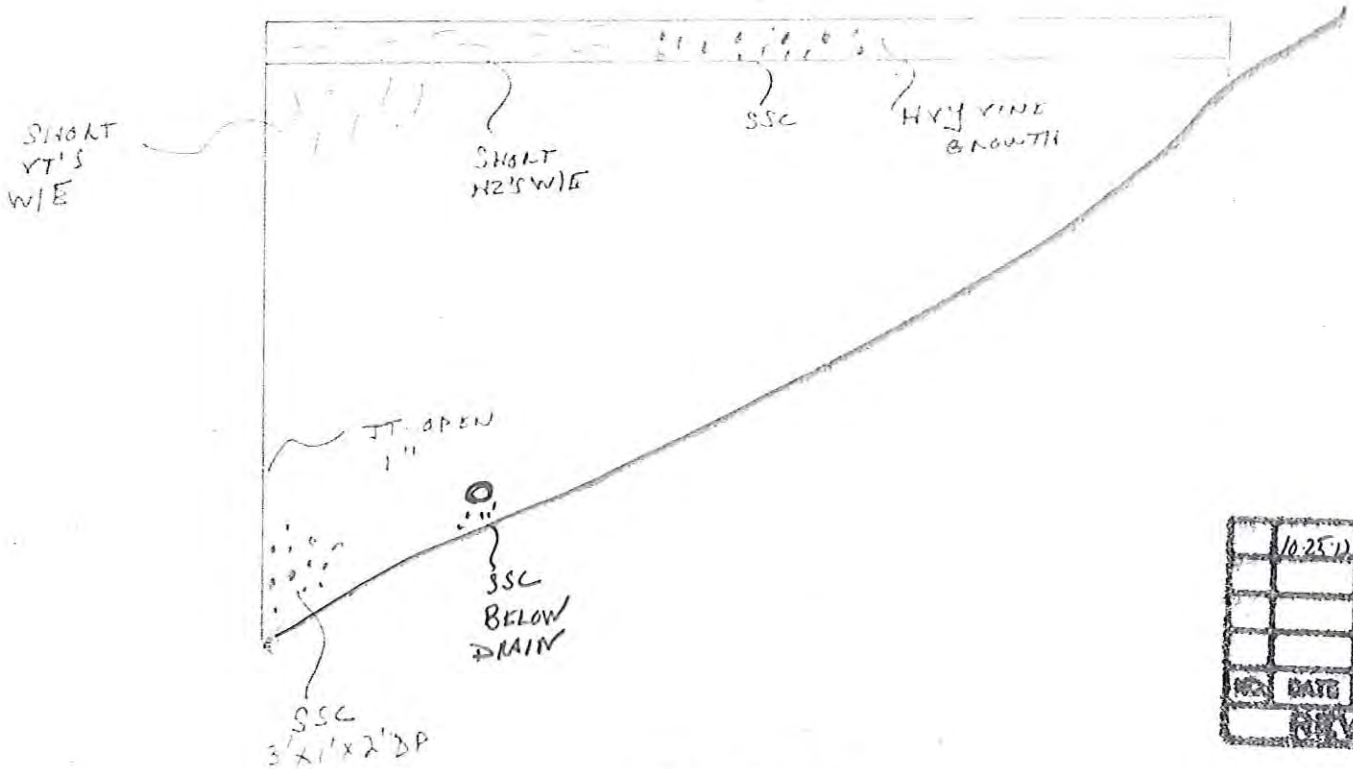

NO.	DATE	DESCRIPTION
	10-25-11	TEAM

REVISIONS

SW - W/W

BRIDGE 05118- MERRYALL ROAD O/WEST ASPETUCK RD NEW MILFORD
11 29 2010

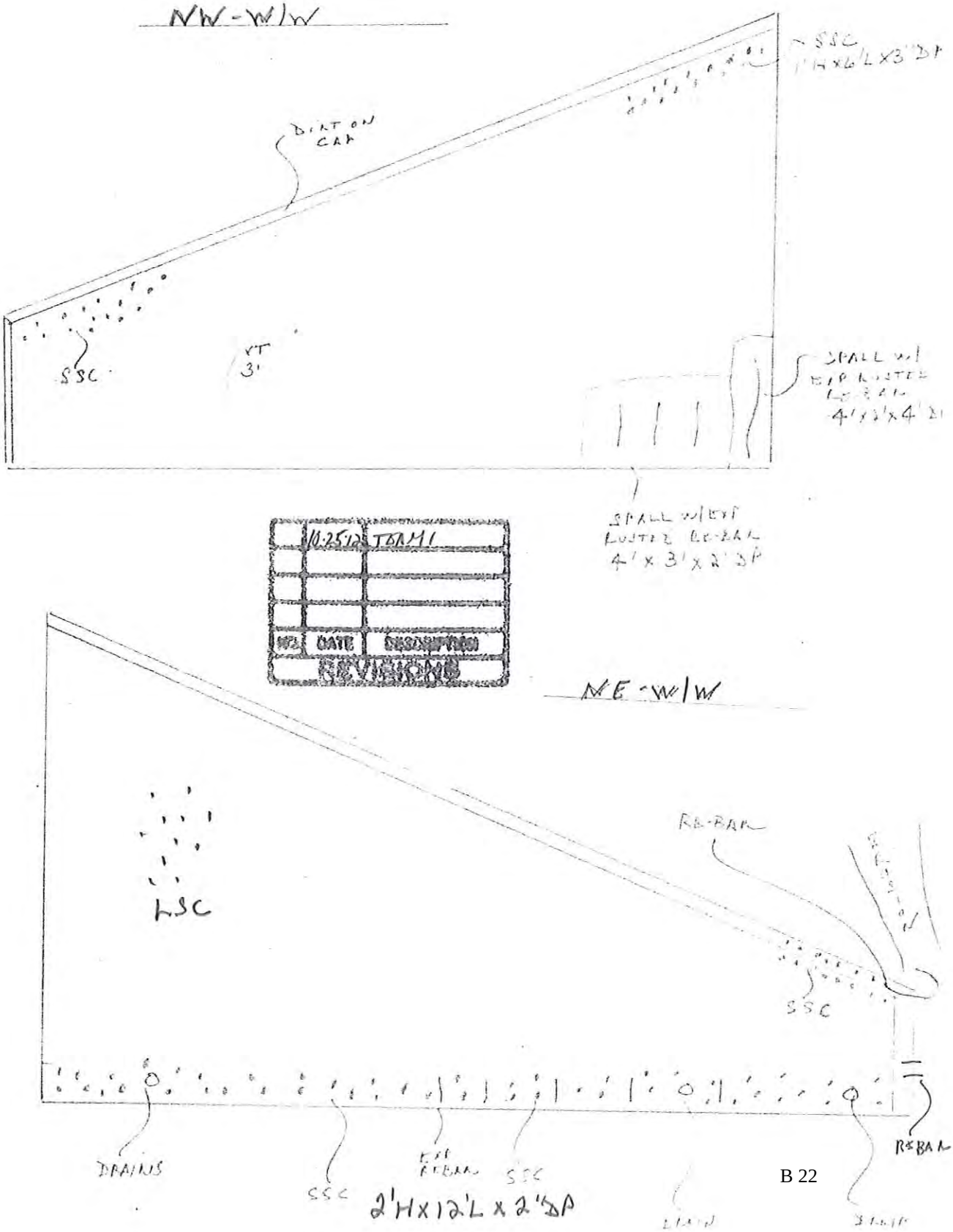

Your Agency Name

Your Office Name
Your Department Name

Structure Inventory and Appraisal Sheet (English Units)

Bridge Key: 05118 Agency ID: 05118 SR: 65.1 SD/FO: SD

IDENTIFICATION

State 1:	09 Connecticut	Struc Num 8:	05118
Facility Carried 7:	MERRYALL ROAD	Location 9:	JCT OF W MEETINGHOUSE RD
Rte (On/Under) 5A:	Route On Structure	Rte. Signing Prefix 5B:	5 City Street
Level of Service 5C:	0 None of the below	Route Number 5D:	00000
Directional Suffix 5E:	0 N/A (NBI)	% Responsibility:	0.00
SHD District 2:	04	County Code 3:	Litchfield
Place Code 4:	NEW MILFORD	Mile Post 11:	1.599 mi
Feature Intersected 6:	WEST ASPETUCK RIVER		
Latitude 16:	41° 37' 36"	Longitude 17:	073° 25' 18"
Border Bridge Code 98:	Unknown (P)		
Border Bridge Number 99:	NA		

STRUCTURE TYPE AND MATERIALS

Number of Approach Spans 46: 0 Number of Spans Main Unit 45: 1

1 Concrete

Deck Type 107:	1 Concrete-Cast-in-Place
Wearing Surface 108A:	6 Bituminous
Membrane 108B:	0 None
Deck protection 108C:	None

AGE AND SERVICE

Year Built 27:	1937	Year Reconstructed 106:	-1
Type of Service on 42A:	1 Highway		
Type of Service under 42B:	5 Waterway		
Lanes on 28A: 2	Lanes under 28B: 0	Detour Length 19:	1.0 mi
ADT 29: 1,145	Truck ADT 109: 4%	Year of ADT 30:	2012

GEOMETRIC DATA

Length Max Span 48:	31.00 ft	Structure Length 49:	35.00 ft
Curb/Sidwlk Width L 50A:	0.50 ft	Curb/Sidewalk Width R 50B:	0.50 ft
Width Curb to Curb 51:	30.00 ft	Width Out to Out 52:	35.00 ft
Approach Roadway width 32: (w/ shoulders)	30.00 ft	Median 33:	0 No median
Deck Area: 1,225.00 sq. ft			
Skew 34:	49.00°	Structure Flared 35:	0 No flare
Vertical Clearance 10:	328.05 ft	Horizontal Clearance 47:	30.00 ft

Minimum Vertical Clearance Over Bridge 53:	328.05 ft
Minimum Vertical Underclearance Reference 54A:	N Feature not hwy or RR
Minimum Vertical Underclearance 54B:	0.00 ft
Minimum Lateral Underclearance Reference R 55A:	N Feature not hwy or RR
Minimum Lateral Underclearance R 55:	327.76 ft
Minimum Lateral Underclearance L 56:	0.00 ft

INSPECTION

Frequency 91:	24 months	Inspection Date 90:	10/25/2012	Next Inspection:	10/25/2014
FC Frequency 92A:	NA	FC Inspection Date 93A:	NA	Next FC Inspection:	NA
UW Frequency 92B:	NA	UW Inspection Date 93B:	NA	Next UW Inspection:	NA
SI Frequency 92C:	24 months	SI Date 93C:	2/1/2001	Next SI:	12/21/2006
Element Frequency:	24 months	Element Insp. Date:	2/28/2012	Next Elem. Insp.:	10/25/2014

CLASSIFICATION

Defense Highway 100:	0 Not a STRAHNET hwy	Parallel Structure 101:	No ‖ bridge exists
Direction of Traffic 102:	2 2-way traffic	Temporary Structure 103:	Unknown (NBI)
Highway System 104:	0 Not on NHS	NBIS Length 112:	Long Enough
Toll Facility 20:	3 On free road	Functional Class 26:	17 Urban Collector
Defense Hwy 110:	0 Not a STRAHNET hwy	Historical Significance 37:	5 Not eligible for NRHP
Owner 22:	03 Town/Township Hwy Agency		
Custodian 21:	03 Town/Township Hwy Agency		

CONDITION

Deck 58:	6 Satisfactory	Super 59:	4 Poor	Sub 60:	4 Poor
Culvert 62:	N N/A (NBI)	Channel/Channel Protection 61:	6 Bank Slumping		

LOAD RATING AND POSTING

Inventory Rating Method 65:	1 LF Load Factor	Operating Rating Method 63:	1 LF Load Factor
Inventory Rating 66:	HS27.7	Operating Rating 64:	HS46.1
Design Load 31:	4 M 18 (H 20)	Posting 70:	5 At/Above Legal Loads
Posting Status 41:	A Open, no restriction		

APPRAISAL

Bridge Rail 36A:	0 Substandard	Approach Rail 36C:	0 Substandard
Transition 36B:	0 Substandard	Approach Rail Ends 36D:	0 Substandard
Str Evaluation 67:	4 Minimum Tolerable	Deck Geometry 68:	5 Above Tolerable
Underclearance, Vertical and Horizontal 69:	N Not applicable (NBI)		
Waterway Adequacy 71:	6 Equal Minimum	Approach Alignment 72:	6 Equal Min Criteria
Scour Critical 113:	8 Stable Above Footing		

PROPOSED IMPROVEMENTS

Bridge Cost 94:	$1,000	Type of Work 75:	38 Other Structural
Roadway Cost 95:	$1,000	Length of Improvement 76:	0.3 ft
Total Cost 96:	$2,000	Future ADT 114:	561
Year of Cost Estimate 9:	2000	Year of Future ADT 115:	2029

NAVIGATION DATA

Navigation Control 38:	Permit Not Required		
Vertical Clearance 39:	0.0 ft	Horizontal Clearance 40:	0.0 ft
Pier Protection 111:	Unknown (NBI)	Lift Bridge Vertical Clearance 116:	0.0 ft

Structure Inventory and Appraisal Sheet (English Units)

ELEMENT CONDITION STATE DATA

Str Unit	Elm/Env	Description	Units	Total Qty	% in 1	Qty. St. 1	% in 2	Qty. St. 2	% in 3	Qty. St. 3	% in 4	Qty. St. 4	% in 5	Qty. St. 5
UNIT0	13/3	Unp Conc Deck/AC Ovl	(SF)	1,225	0%	0	100%	1,225	0%	0	0%	0	0%	0
UNIT0	110/3	R/Conc Open Girder	(LF)	175	31%	55	46%	80	23%	40	0%	0	0%	0
UNIT0	215/3	R/Conc Abutment	(LF)	69	0%	0	28%	19	73%	50	0%	0	0%	0
UNIT0	331/3	Conc Bridge Railing	(LF)	89	27%	24	67%	60	6%	5	0%	0	0%	0
UNIT0	360/3	Settlement SmFlag	(EA)	1	100%	1	0%	0	0%	0	0%	0	0%	0
UNIT0	361/3	Scour Smart Flag	(EA)	1	100%	1	0%	0	0%	0	0%	0	0%	0

Bridge No.	05118	**Inspected by:**	DUNCAN McCLAVE
Town:	New Milford	**Inspected by:**	KIRK WEIR
Feature Carried:	Merryall Road	**Date Inspected:**	Thursday, October 25, 2012
Feature Crossed:	West Aspetuck River		

Photo # 1
Looking South over the structure.

Photo # 2
Wearing surface.

Bridge No.	05118	**Inspected by:**	DUNCAN McCLAVE
Town:	New Milford	**Inspected by:**	KIRK WEIR
Feature Carried:	Merryall Road	**Date Inspected:**	Thursday, October 25, 2012
Feature Crossed:	West Aspetuck River		

Photo # 3
Severe scale in the concrete end post and rail base on West side of structure, looking from the South end.

Photo # 4
Severe scale in the East rail-base.

Bridge No.	05118	**Inspected by:**	DUNCAN McCLAVE
Town:	New Milford	**Inspected by:**	KIRK WEIR
Feature Carried:	Merryall Road	**Date Inspected:**	Thursday, October 25, 2012
Feature Crossed:	West Aspetuck River		

Photo # 5
Broken post at the Southwest corner.

Photo # 6
Erosion at the Southeast corner.

Bridge No.	05118	**Inspected by:**	DUNCAN McCLAVE
Town:	New Milford	**Inspected by:**	KIRK WEIR
Feature Carried:	Merryall Road	**Date Inspected:**	Thursday, October 25, 2012
Feature Crossed:	West Aspetuck River		

Photo # 7
Inlet. {North}

Photo # 8
Outlet. {South}

Bridge No.	05118	**Inspected by:**	DUNCAN McCLAVE
Town:	New Milford	**Inspected by:**	KIRK WEIR
Feature Carried:	Merryall Road	**Date Inspected:**	Thursday, October 25, 2012
Feature Crossed:	West Aspetuck River		

Photo # 9
General underside. {Looking from abutment # 1.}

Photo # 10
Cracks with efflorescence, stalactites, and spalls with exposed shallow rusted rebar in the underside of deck, bay # 1.

Bridge No.	05118	**Inspected by:**	DUNCAN McCLAVE
Town:	New Milford	**Inspected by:**	KIRK WEIR
Feature Carried:	Merryall Road	**Date Inspected:**	Thursday, October 25, 2012
Feature Crossed:	West Aspetuck River		

Photo # 11
Spalls with exposed shallow rusted rebar and cracks with efflorescence, stalactites in the underside of deck, bay # 4.

Photo # 12
Spall with exposed rusted rebar in the underside of beam # 1, near mid-span.

Bridge No.	05118	**Inspected by:**	DUNCAN McCLAVE
Town:	New Milford	**Inspected by:**	KIRK WEIR
Feature Carried:	Merryall Road	**Date Inspected:**	Thursday, October 25, 2012
Feature Crossed:	West Aspetuck River		

Photo # 13
Wide spread cracking with efflorescence and stalactites in the underside of beam # 5, looking from abutment # 1.

Photo # 14
Very heavy efflorescence and stalactites on the face of abutment # 1, from beam # 5 above.

Bridge No.	05118	**Inspected by:**	DUNCAN McCLAVE
Town:	New Milford	**Inspected by:**	KIRK WEIR
Feature Carried:	Merryall Road	**Date Inspected:**	Thursday, October 25, 2012
Feature Crossed:	West Aspetuck River		

Photo # 15
Abutment # 1. {Note heavy scale around drains.}
(WEST)

Photo # 16
Abutment # 2. {East}

Bridge No.	05118	**Inspected by:**	DUNCAN McCLAVE
Town:	New Milford	**Inspected by:**	KIRK WEIR
Feature Carried:	Merryall Road	**Date Inspected:**	Thursday, October 25, 2012
Feature Crossed:	West Aspetuck River		

Photo # 17
Very heavy scale around the drains at base of abutment # 2.
(EAST)

Photo # 18
Heavily rusted and severed rebar located in the scale under drain located near centerline at abutment # 1.
(WEST)

Bridge No.	05118	**Inspected by:**	DUNCAN McCLAVE
Town:	New Milford	**Inspected by:**	KIRK WEIR
Feature Carried:	Merryall Road	**Date Inspected:**	Thursday, October 25, 2012
Feature Crossed:	West Aspetuck River		

Photo # 19
Southeast wing-wall. {Note severe scale with exposed rusted rebar at base.}

Photo # 20
Northeast wing-wall. {Note severe scale with exposed rusted rebar near corner of abutment # 2.

Bridge No.	05118	**Inspected by:**	DUNCAN McCLAVE
Town:	New Milford	**Inspected by:**	KIRK WEIR
Feature Carried:	Merryall Road	**Date Inspected:**	Thursday, October 25, 2012
Feature Crossed:	West Aspetuck River		

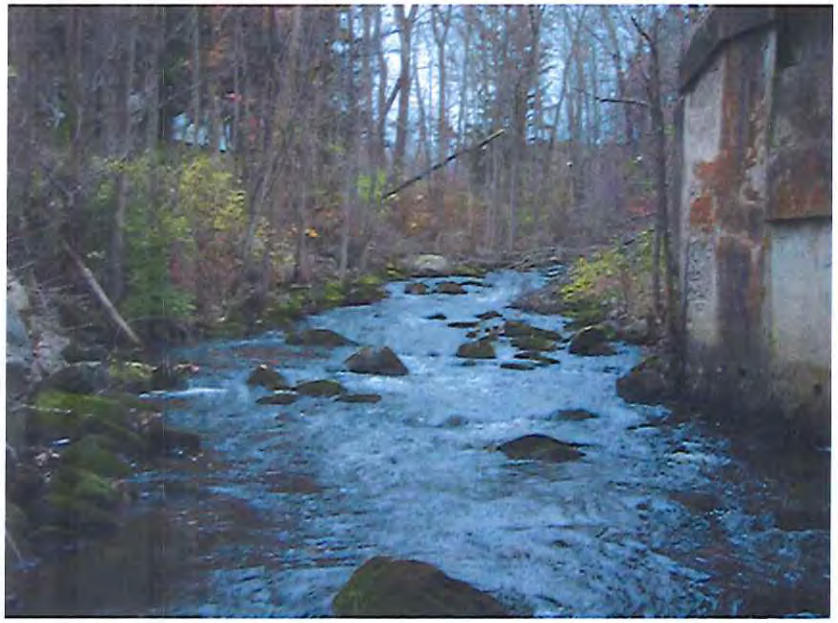

Photo # 21
Looking upstream from the inlet.

Photo # 22
Looking downstream from the outlet.

APPENDIX - C

Figures

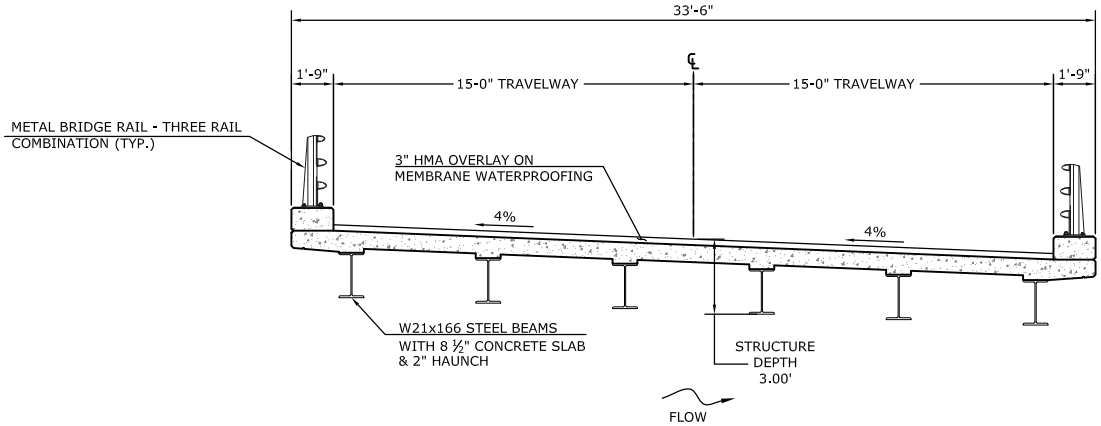

ALTERNATIVE I - BRIDGE SECTION

SCALE: 1/8" = 1' - 0"

PE SUBMITTAL

SUPV.	D.A.G.
DESIGN	J.A.W.
DRAWN	J.A.W.
CHECKED	D.A.G.
DATE	01/22/15

WMC CONSULTING ENGINEERS

• WENGELL, McDONNELL & COSTELLO •
87 HOLMES ROAD
NEWINGTON, CT 06111
(860) 667-9624

PREPARED FOR

TOWN OF NEW MILFORD
10 MAIN STREET
NEW MILFORD, CT. 06776

ALTERNATIVE I - STEEL BEAMS BRIDGE - REPLACEMENT OF THE MERRYALL RD. BRIDGE OVER THE WEST ASPETUCK RIVER

SIZE	PROJECT	FILE NAME	NUMBER	REV.	SHEET	OF
D –	MERRYALL RD. –	P.E. –	14094.10 –		C1	C3

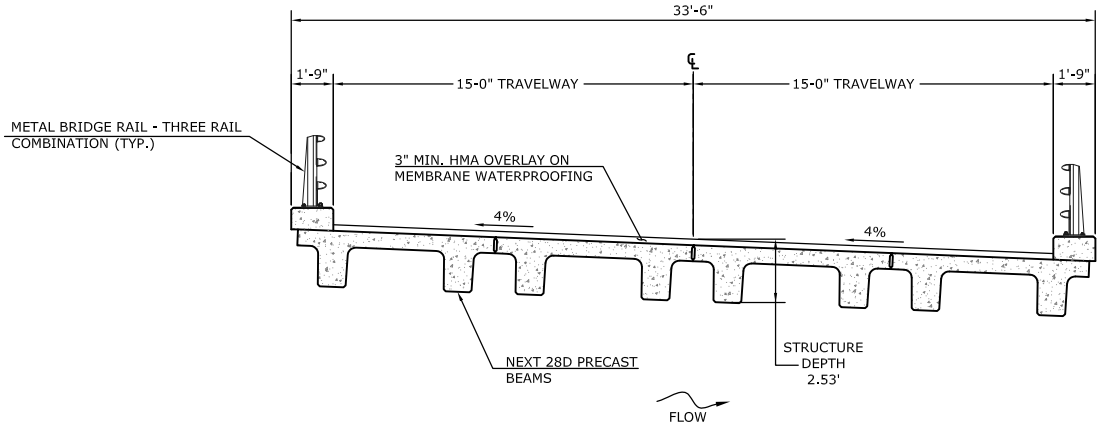

ALTERNATIVE II - BRIDGE SECTION

SCALE: 1/8" = 1' - 0"

PE SUBMITTAL

SUPV.	D.A.G.
DESIGN	J.A.W.
DRAWN	J.A.W.
CHECKED	D.A.G.
DATE	01/22/15

WMC CONSULTING ENGINEERS

• WENGELL, McDONNELL & COSTELLO •
87 HOLMES ROAD
NEWINGTON, CT 06111
(860) 667-9624

PREPARED FOR

TOWN OF NEW MILFORD
10 MAIN STREET
NEW MILFORD, CT. 06776

ALTERNATIVE II - PRECAST NEXT BEAMS BRIDGE - REPLACEMENT OF THE MERRYALL RD. BRIDGE OVER THE WEST ASPETUCK RIVER

SIZE	PROJECT	FILE NAME	NUMBER	REV.	SHEET	OF
D –	MERRYALL RD. –	P.E. –	14094.10 –		C2	C3

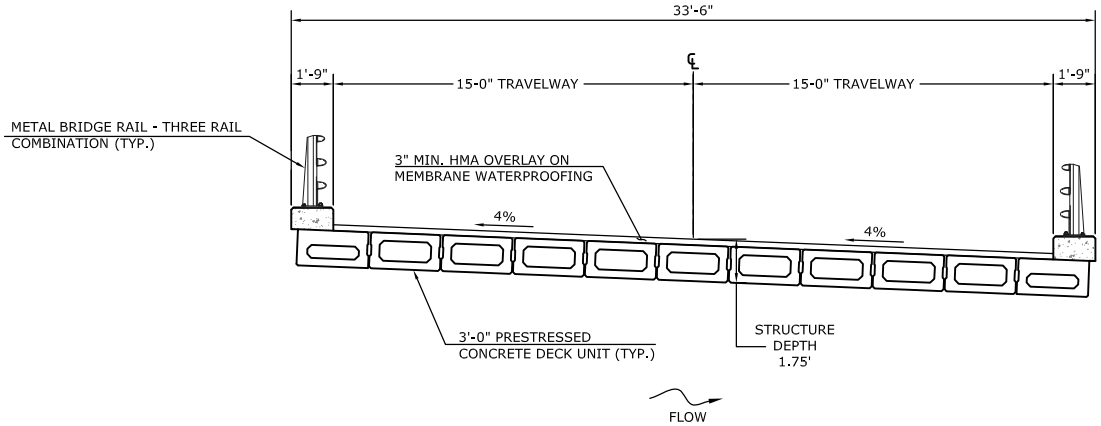

ALTERNATIVE III - BRIDGE SECTION

SCALE: 1/8" = 1' - 0"

PE SUBMITTAL	SUPV. D.A.G. DESIGN J.A.W. DRAWN J.A.W. CHECKED D.A.G. DATE 01/22/15	WMC CONSULTING ENGINEERS WENGELL, McDONNELL & COSTELLO 87 HOLMES ROAD NEWINGTON, CT 06111 (860) 667-9624	**PREPARED FOR** TOWN OF NEW MILFORD 10 MAIN STREET NEW MILFORD, CT. 06776	ALTERNATIVE III - PRECAST DECK UNIT BRIDGE - REPLACEMENT OF THE MERRYALL RD. BRIDGE OVER THE WEST ASPETUCK RIVER D – MERRYALL RD. – P.E. – 14094.10 – SIZE PROJECT FILE NAME NUMBER REV. SHEET C3 OF C3

APPENDIX - D

Superstructure Cost Opinions

WMC CONSULTING ENGINEERS

Town of New Milford — Date: 01/22/15

Merryall Road over West Aspetuck River — Prepared By: J.A.W.

WMC Reference No.: 14094.10

Alternate I Superstructure Cost Opinion - Steel Beams

No.		ITEM	UNIT	QTY		UNIT PRICE		TOTAL COST
0201001		Clearing and Grubbing	L.S.	1	$	10,000.00	$	10,000.00
0406171		HMA S0.5	Ton	20	$	84.00	$	1,680.00
0406173		HMA S0.25	Ton	15	$	83.00	$	1,245.00
0503001		Removal of Superstructure	L.S.	1	$	55,000.00	$	55,000.00
0521014		Steel-Laminated Elastomeric Bearings	C.I.	7060	$	4.00	$	28,240.00
0601604		Asphaltic Plug Expansion Joint System	L.F.	80	$	115.00	$	9,200.00
0601201		Class "F" Concrete	C.Y.	50	$	849.20	$	42,460.00
0602011		Deformed Steel Bars-Epoxy Coated	Lbs.	7000	$	1.40	$	9,800.00
0603061		Structural Steel (Site No. 1)	L.S.	1	$	200,400.00	$	200,400.00
0603371		Materials for Structural Steel (Site No. 1)	Est.	1	$	120,000.00	$	120,000.00
0707001		Membrane Waterproofing (Woven Glass Fabric)	S.Y.	140	$	29.60	$	4,144.00
0904041		Metal Bridge Rail (Combination)	L.F.	55	$	340.00	$	18,700.00
0971001	A	Maintenance and Protection of Traffic	L.S.	1	$	15,000.00	$	15,000.00
0975002		Mobilization	L.S.	1	$	37,000.00	$	37,000.00
0980001		Construction Staking	L.S.	1	$	5,000.00	$	5,000.00
						SUBTOTAL	$	557,869.00
						CONTINGENCY @ 25%	$	139,467.25
						2015 TOTAL		**$697,336.25**
						Projected 1 year to Year 2016 @ 4% per year		**$725,229.70**
						SAY TOTAL		**$730,000.00**

WMC CONSULTING ENGINEERS

Town of New Milford — Date: 01/22/15

Merryall Road over West Aspetuck River — Prepared By: J.A.W.

WMC Reference No.: 14094.10

Alternate II Superstructure Cost Opinion - NEXT Beams

No.	ITEM	UNIT	QTY		UNIT PRICE		TOTAL COST
0201001	Clearing and Grubbing	L.S.	1	$	5,500.00	$	5,500.00
0406171	HMA S0.5	Ton	20	$	84.00	$	1,680.00
0406173	HMA S0.25	Ton	15	$	83.00	$	1,245.00
0503001	Removal of Superstructure	L.S.	1	$	55,000.00	$	55,000.00
0514XXX	NEXT Beams	L.S.	1	$	140,000.00	$	140,000.00
0521014	Steel-Laminated Elastomeric Bearings	C.I.	7060	$	4.00	$	28,240.00
0601201	Class "F" Concrete	C.Y.	15	$	849.20	$	12,738.00
0601604	Asphaltic Plug Expansion Joint System	L.F.	80	$	115.00	$	9,200.00
0602011	Deformed Steel Bars-Epoxy Coated	Lbs.	2000	$	1.40	$	2,800.00
0707001	Membrane Waterproofing (Woven Glass Fabric)	S.Y.	140	$	29.60	$	4,144.00
0904041	Metal Bridge Rail (Combination)	L.F.	55	$	340.00	$	18,700.00
0971001 A	Maintenance and Protection of Traffic	L.S.	1	$	8,500.00	$	8,500.00
0975002	Mobilization	L.S.	1	$	21,000.00	$	21,000.00
0980001	Construction Staking	L.S.	1	$	3,000.00	$	3,000.00
					SUBTOTAL	$	311,747.00
					CONTINGENCY @ 25%	$	77,936.75
					2015 TOTAL		**$389,683.75**
					Projected 1 year to Year 2016 @ 4% per year		**$405,271.10**
					SAY TOTAL		**$410,000.00**

WMC CONSULTING ENGINEERS

Town of New Milford — Date: 01/22/15

Merryall Road over West Aspetuck River — Prepared By: J.A.W.

WMC Reference No.: 14094.10

Alternate III Superstructure Cost Opinion - Deck Units

No.	ITEM	UNIT	QTY		UNIT PRICE		TOTAL COST
0201001	Clearing and Grubbing	L.S.	1	$	5,000.00	$	5,000.00
0406171	HMA S0.5	Ton	20	$	84.00	$	1,680.00
0406173	HMA S0.25	Ton	15	$	83.00	$	1,245.00
0503001	Removal of Superstructure	L.S.	1	$	55,000.00	$	55,000.00
0514XXX	Prestressed Deck Units (3'-0"x1'-6")	L.F.	407	$	275.00	$	111,925.00
0521014	Steel-Laminated Elastomeric Bearings	C.I.	7395	$	4.00	$	29,580.00
0601201	Class "F" Concrete	C.Y.	15	$	849.20	$	12,738.00
0601604	Asphaltic Plug Expansion Joint System	L.F.	80	$	115.00	$	9,200.00
0602011	Deformed Steel Bars-Epoxy Coated	Lbs.	2000	$	1.40	$	2,800.00
0707001	Membrane Waterproofing (Woven Glass Fabric)	S.Y.	140	$	29.60	$	4,144.00
0904041	Metal Bridge Rail (Combination)	L.F.	55	$	340.00	$	18,700.00
0971001 A	Maintenance and Protection of Traffic	L.S.	1	$	7,500.00	$	7,500.00
0975002	Mobilization	L.S.	1	$	19,000.00	$	19,000.00
0980001	Construction Staking	L.S.	1	$	2,500.00	$	2,500.00
					SUBTOTAL	$	281,012.00
					CONTINGENCY @ 25%	$	70,253.00
					2015 TOTAL		**$351,265.00**
					Projected 1 year to Year 2016 @ 4% per year		**$365,315.60**
					SAY TOTAL		**$370,000.00**

APPENDIX - E

Preliminary Boring Logs

Jaime Lloret	**TEST BORING REPORT**	SHEET 1 OF 2
DRILLER	**ASSOCIATED BORINGS CO., INC.**	
	119 MARGARET CIRCLE, NAUGATUCK, CT 06770	CME-55
INSPECTOR	**Tel (203) 729-5435 Fax (203) 729-5116**	DRILLING EQUIPMENT
	PROJECT NAME: Merryall Road Bridge	Wengall McDonnell Costello
SOILS ENGINEER	PROJECT NUMBER:	CLIENT
Surface Elevation:	LOCATION: New Milford, Connecticut	

Date Started: 11/21/2014		Auger	Casing	Sampler		Core Bar	Hole No. **B-2**
Date Finished: 11/21/2014	Type	HSA		SS			Line & Station
Groundwater Observations	Size I. D.	3 1/4		2	in		Offset
AT 9 ' AFTER 0 HRS	Hammer			140	lb	Bit	N Coordinate
AT ' AFTER HRS	Fall			30	in		E. Coordinate

DEPTH	Casing blows per foot	SAMPLE DEPTH IN FEET FROM - TO	NO.	PEN. INCH	REC. INCH	TYPE	BLOWS PER 6 INCHES ON SAMPLER 0 - 6	6 - 12	12-18	18-24	STRATA CHANGE: DEPTH, ELEV.	FIELD IDENTIFICATION OF SOIL, REMARKS (INCL. COLOR, LOSS OF WASH WATER, ETC.)
											4"	Bituminous Concrete
											1	Trap Rock
												Br. M-F Sand, Some C-F Gravel, Tr. Silt Cobbles, Boulders (Fill)
5		5.0 - 6.5	1	18	2	D	16	29	52	X		
10		10.0 - 12.0	2	24	6	D	6	6	5	4	10	
												Gr. F. Sand and Silt
15		15.0 - 17.0	3	24	6	D	16	52	47	53		
20		20.0 - 22.0	4	24	20	D	23	32	30	41	20	
												Br. M-F Sand, Some Silt, Tr. M-F Gravel
25		25.0 - 26.5	5	18	12	D	21	47	52	X	25	
												Br. Silt and F. Sand with Layers of Highly Weathered Bedrock
30		30.0 - 31.5	6	18	12	D	26	34	50	X		
35		35.0 - 36.5	7	18	13	D	26	32	50	X		
40		40.0 - 41.2	8	14	14	D	16	26	50/2"	X	40	

From Ground Surface to Feet Used Inch Casing Then Inch Casing For Feet

Footage in Earth 40.0 Footage in Rock 0.0 No. of Samples 8 Hole No. **B-2**

SAMPLE TYPE CODING: D = DRIVEN C = CORE A = AUGER UP = UNDISTURBED PISTON

PROPORTIONS USED: TRACE = 1-10% LITTLE = 10-20% SOME = 20-35% AND = 35-50%

Jaime Lloret	**TEST BORING REPORT**	SHEET 2 OF 2
DRILLER	**ASSOCIATED BORINGS CO., INC.**	
	119 MARGARET CIRCLE, NAUGATUCK, CT 06770	CME-55
INSPECTOR	**Tel (203) 729-5435 Fax (203) 729-5116**	DRILLING EQUIPMENT
	PROJECT NAME: Merryall Road Bridge	Wengall McDonnell Costello
SOILS ENGINEER	PROJECT NUMBER:	CLIENT
Surface Elevation:	LOCATION: New Milford, Connecticut	

Date Started: 11/21/2014		Auger	Casing	Sampler		Core Bar	Hole No. **B-2**
Date Finished: 11/21/2014	Type	HSA		SS			Line & Station
Groundwater Observations	Size I. D.	3 1/4		2	in		Offset
AT 9 ' AFTER 0 HRS	Hammer			140	lb	Bit	N Coordinate
AT ' AFTER HRS	Fall			30	in		E. Coordinate

DEPTH	Casing blows per foot	SAMPLE DEPTH IN FEET FROM - TO	NO.	PEN. INCH	REC. INCH	TYPE	BLOWS PER 6 INCHES ON SAMPLER 0 - 6	6 - 12	12-18	18-24	STRATA CHANGE: DEPTH, ELEV.	FIELD IDENTIFICATION OF SOIL, REMARKS (INCL. COLOR, LOSS OF WASH WATER, ETC.)
											40	Br. Silt and F. Sand with Layers of Highly Weathered Bedrock
45		45.5 - 50.5	1	60	39						45.5	
	2											Cored Run # 1 From 45.5 feet to 50.5 feet Recovery - 39" RQD - 27/60" = 45%
	3											
	4											
	3											
50	3	50.5 - 55.5	2	60	20						50.5	
	2											Cored Run # 2 From 50.5 feet to 55.5 feet Recovery - 20" RQD - 13/60" = 21%
	3											
	4											
	3											
55	3	55.5 - 60.5	3	60	49						55.5	
	3											Cored Run # 3 From 55.5 feet to 60.5 feet Recovery - 49" RQD - 31/60" = 51%
	4											
	3											
	2											
60	4										60.5	
												End of Boring - 60.5
65												
70												
75												
80												

From Ground Surface to Feet Used Inch Casing Then Inch Casing For Feet

Footage in Earth 5.5 Footage in Rock 15.0 No. of Samples 0 Hole No. **B-2**

SAMPLE TYPE CODING: D = DRIVEN C = CORE A = AUGER UP = UNDISTURBED PISTON

PROPORTIONS USED: TRACE = 1-10% LITTLE = 10-20% SOME = 20-35% AND = 35-50%

E 2

Jaime Lloret	**TEST BORING REPORT**	SHEET 1 OF 2
DRILLER	**ASSOCIATED BORINGS CO., INC.**	
	119 MARGARET CIRCLE, NAUGATUCK, CT 06770	CME-55
INSPECTOR	**Tel (203) 729-5435 Fax (203) 729-5116**	DRILLING EQUIPMENT
	PROJECT NAME: Merryall Road Bridge	Wengall McDonnell Costello
SOILS ENGINEER	PROJECT NUMBER:	CLIENT
Surface Elevation:	LOCATION: New Milford, Connecticut	

Date Started: 11/20/2014		Auger	Casing	Sampler		Core Bar	Hole No. **B-4**
Date Finished: 11/20/2014	Type	HSA		SS			Line & Station
Groundwater Observations	Size I. D.	3 1/4		2	in		Offset
AT 9 ' AFTER 0 HRS	Hammer			140	lb	Bit	N Coordinate
AT ' AFTER HRS	Fall			30	in		E. Coordinate

DEPTH	Casing blows per foot	SAMPLE DEPTH IN FEET FROM - TO	NO.	PEN. INCH	REC. INCH	TYPE	BLOWS PER 6 INCHES ON SAMPLER 0 - 6	6 - 12	12-18	18-24	STRATA CHANGE: DEPTH, ELEV.	FIELD IDENTIFICATION OF SOIL, REMARKS (INCL. COLOR, LOSS OF WASH WATER, ETC.)
											4"	Bituminous Concrete
											1	Trap Rock
												Br. M-F Sand, Some C-F Gravel, Tr. Silt Cobbles, Boulders (Fill)
5		5.0 - 7.0	1	24	2	D	6	6	5	5		
10		10.0 - 10.5	2	6	6	D	50	X	X	X	10	
												Gr. F. Sand and Silt
15		15.0 - 17.0	3	24	6	D	6	10	15	26		
20		20.0 - 20.9	4	9	9	D	26	50/3"	X	X	20	
												Br. M-F Sand, Some Silt, Tr. M-F Gravel
25		25.0 - 25.8	5	8	8	D	27	50/2"	X	X	25	
												Br. Silt and F. Sand with Layers of Highly Weathered Bedrock
30		30.0 - 31.3	6	15	12	D	16	29+	50/3"	X		
35		35.0 - 35.5	7	6	6	D	50	X	X	X	35.5	
	3	35.5 - 40.5	1	60	12	C						Cored Run # 1
	2											From 35.5 feet to 40.5 feet
	2											Recovery - 12"
	3											RQD - 0/60" = 0%
40	4										40.5	

From Ground Surface to Feet Used Inch Casing Then Inch Casing For Feet

Footage in Earth 35.5 Footage in Rock 5.0 No. of Samples 7 Hole No. **B-4**

SAMPLE TYPE CODING: D = DRIVEN C = CORE A = AUGER UP = UNDISTURBED PISTON

PROPORTIONS USED: TRACE = 1-10% LITTLE = 10-20% SOME = 20-35% AND = 35-50%

Jaime Lloret	**TEST BORING REPORT**	SHEET 2 OF 2
DRILLER	**ASSOCIATED BORINGS CO., INC.**	
	119 MARGARET CIRCLE, NAUGATUCK, CT 06770	CME-55
INSPECTOR	**Tel (203) 729-5435 Fax (203) 729-5116**	DRILLING EQUIPMENT
	PROJECT NAME: Merryall Road Bridge	Wengall McDonnell Costello
SOILS ENGINEER	PROJECT NUMBER:	CLIENT
Surface Elevation:	LOCATION: New Milford, Connecticut	

Date Started: 11/20/2014		Auger	Casing	Sampler		Core Bar	Hole No. **B-4**
Date Finished: 11/20/2014	Type	HSA		SS			Line & Station
Groundwater Observations	Size I. D.	3 1/4		2	in		Offset
AT 9 ' AFTER 0 HRS	Hammer			140	lb	Bit	N Coordinate
AT ' AFTER HRS	Fall			30	in		E. Coordinate

DEPTH	Casing blows per foot	SAMPLE DEPTH IN FEET FROM - TO	NO.	PEN. INCH	REC. INCH	TYPE	BLOWS PER 6 INCHES ON SAMPLER 0 - 6	6 - 12	12-18	18-24	STRATA CHANGE: DEPTH, ELEV.	FIELD IDENTIFICATION OF SOIL, REMARKS (INCL. COLOR, LOSS OF WASH WATER, ETC.)
		40.0 - 45.5	2	60	32	D					40.5	
	2											Cored Run # 2
	3											From 40.5 feet to 45.5 feet
	4											Recovery - 32"
45	3											RQD - 0/60" = 0%
	4										45.5	
												End of Boring - 45.5
50												
55												
60												
65												
70												
75												
80												

From Ground Surface to Feet Used Inch Casing Then Inch Casing For Feet

Footage in Earth 0.0 Footage in Rock 5.0 No. of Samples 0 Hole No. **B-4**

SAMPLE TYPE CODING: D = DRIVEN C = CORE A = AUGER UP = UNDISTURBED PISTON

PROPORTIONS USED: TRACE = 1-10% LITTLE = 10-20% SOME = 20-35% AND = 35-50%